United Kingdom
en

remeha

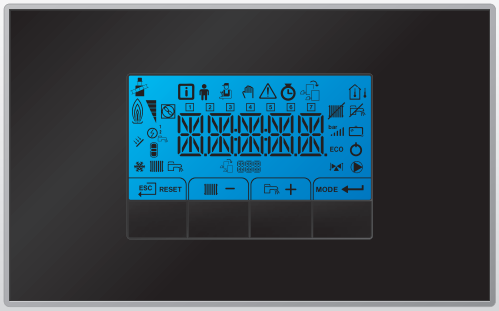

Installation, User and Service Manual

High-efficiency wall-hung gas boiler

Quinta Ace 160

HMI S-control

Dear Customer,

Thank you very much for buying this appliance.

Please read through the manual carefully before using the product, and keep it in a safe place for later reference. In order to ensure continued safe and efficient operation we recommend that the product is serviced regularly. Our service and customer service organisation can assist with this.

We hope you enjoy years of problem-free operation with the product.

Contents

1 Safety . . . 6
1.1 General safety instructions . . . 6
1.2 Recommendations . . . 8
1.3 Specific safety instructions . . . 10
1.3.1 Additional guidelines . . . 10
1.4 Liabilities . . . 10
1.4.1 Manufacturer's liability . . . 10
1.4.2 Installer's liability . . . 10
1.4.3 User's liability . . . 11

2 About this manual . . . 12
2.1 General . . . 12
2.2 Additional documentation . . . 12
2.3 Symbols used . . . 12
2.3.1 Symbols used in the manual . . . 12

3 Technical specifications . . . 13
3.1 Homologations . . . 13
3.1.1 Certifications . . . 13
3.1.2 Unit categories . . . 13
3.1.3 Directives . . . 13
3.1.4 Factory test . . . 13
3.2 Technical data . . . 13
3.3 Dimensions and connections . . . 16
3.4 Electrical diagram . . . 17

4 Description of the product . . . 18
4.1 General description . . . 18
4.2 Operating principle . . . 18
4.2.1 Gas/air regulation . . . 18
4.2.2 Combustion . . . 18
4.2.3 Control system . . . 18
4.2.4 Control . . . 19
4.2.5 Regulating the water temperature . . . 19
4.2.6 Protection against shortage of water . . . 19
4.2.7 Water flow . . . 19
4.2.8 Hydraulic pressure sensor . . . 19
4.2.9 Air pressure differential switch . . . 19
4.2.10 Circulating pump . . . 20
4.2.11 Calorifier connection . . . 20
4.2.12 Cascade system . . . 20
4.3 Main components . . . 20
4.4 Control panel description . . . 21
4.4.1 What each key means . . . 21
4.4.2 Meaning of the symbols on the display . . . 21
4.5 Standard delivery . . . 22
4.6 Accessories and options . . . 22

5 Before installation . . . 23
5.1 Installation regulations . . . 23
5.2 Lifting instruction . . . 23
5.3 Choice of the location . . . 23
5.3.1 Type plate . . . 23
5.3.2 Location of the boiler . . . 24
5.4 Transport . . . 24
5.5 Unpacking & initial preparation . . . 25

6 Installation . . . 26
6.1 General . . . 26
6.2 Preparation . . . 26
6.2.1 Positioning the boiler . . . 26
6.3 Hydraulic connections . . . 26
6.3.1 Rinsing the system . . . 26
6.3.2 Connecting the heating circuit . . . 27

6.3.3 Connecting the expansion vessel . . . 27
6.3.4 Connecting the condensate drain pipe . . . 28
6.4 Gas connection . . . 28
6.5 Air supply/flue gas connections . . . 28
6.5.1 Classification . . . 29
6.5.2 Material . . . 30
6.5.3 Dimensions of flue gas outlet pipe . . . 31
6.5.4 Length of the air and flue gas pipes . . . 31
6.5.5 Additional guidelines . . . 32
6.5.6 Specific air and flue gas applications . . . 33
6.5.7 Connecting the flue gas outlet and air supply . . . 33
6.6 Electrical connections . . . 34
6.6.1 Recommendations . . . 34
6.6.2 Control unit . . . 34
6.6.3 Assembly of the control panel . . . 35
6.6.4 Connecting the connection box . . . 36
6.6.5 Connection possibilities for the standard PCB (CB-01) . . . 37
6.7 Connecting a PC/laptop . . . 39
6.8 Filling the installation . . . 40
6.8.1 Water quality and water treatment . . . 40
6.8.2 Filling the siphon . . . 40
6.8.3 Filling the system . . . 40

7 Commissioning . . . 41
7.1 General . . . 41
7.2 Gas circuit . . . 41
7.3 Hydraulic circuit . . . 41
7.4 Electrical connections . . . 41
7.5 Commissioning procedure . . . 41
7.6 Gas settings . . . 42
7.6.1 Adjusting to a different gas type . . . 42
7.6.2 Checking/setting combustion . . . 43
7.7 Final instructions . . . 45

8 Operation . . . 46
8.1 Use of the control panel . . . 46
8.1.1 Meaning of the symbols on the display . . . 46
8.1.2 Browsing in the menus . . . 46
8.2 Shutdown . . . 47
8.3 Frost protection . . . 48

9 Settings . . . 49
9.1 Changing the parameters . . . 49
9.1.1 Configuring the installation parameters . . . 49
9.2 List of parameters . . . 50
9.2.1 Parameters - FSB-WHB-HE-150-300 . . . 50
9.3 Reading out measured values . . . 53
9.3.1 Reading out counters . . . 53
9.3.2 Reading out signals and software versions . . . 53
9.3.3 Status and Sub-status . . . 54
9.4 List of measured values . . . 54
9.4.1 Counters - FSB-WHB-HE-150-300 . . . 54
9.4.2 Signals - FSB-WHB-HE-150-300 . . . 54
9.4.3 Status and sub-status - FSB-WHB-HE-150-300 . . . 56

10 Maintenance . . . 58
10.1 General . . . 58
10.2 Maintenance message . . . 58
10.2.1 Resetting the service messages . . . 58
10.2.2 Starting a new service interval . . . 59
10.3 Standard inspection and maintenance operations . . . 59
10.3.1 Checking the water pressure . . . 59
10.3.2 Checking the water quality . . . 59
10.3.3 Checking the ionisation current . . . 60
10.3.4 Checking the flue gas discharge/air supply connections . . . 60
10.3.5 Checking the combustion . . . 60

10.3.6 Checking the PS air pressure differential switch . . . 61
10.3.7 Checking the automatic air vent . . . 62
10.3.8 Checking the burner and cleaning the heat exchanger . . . 63
10.3.9 Clean the condensate collector . . . 64
10.3.10 Cleaning the siphon . . . 64
10.4 Specific maintenance work . . . 64
10.4.1 Replacing the ionisation/ignition electrode . . . 65
10.4.2 Checking the non-return valve . . . 65
10.4.3 Reassembling the boiler . . . 66

11 Disposal . . . 67
11.1 Removal/recycling . . . 67

12 Troubleshooting . . . 68
12.1 Error codes . . . 68
12.1.1 Warning - FSB-WHB-HE-150-300 . . . 68
12.1.2 Blocking - FSB-WHB-HE-150-300 . . . 69
12.1.3 Lock-out - FSB-WHB-HE-150-300 . . . 71
12.1.4 Error memory . . . 74

13 Appendix . . . 77
13.1 ErP information . . . 77
13.1.1 Product fiche . . . 77
13.2 EC declaration of conformity . . . 77
13.3 Checklist for commissioning . . . 77
13.4 Checklist for annual maintenance . . . 78

1 Safety

1.1 General safety instructions

For the installer:

Danger
If you smell gas:

1. Do not use naked flames, do not smoke and do not operate electrical contacts or switches (doorbell, lighting, motor, lift etc).
2. Shut off the gas supply.
3. Open the windows.
4. Trace possible leaks and seal them off immediately.
5. If the leak is upstream of the gas meter, notify the gas company.

Danger
If you smell flue gases:

1. Switch the boiler off.
2. Open the windows.
3. Trace possible leaks and seal them off immediately.

Caution
After maintenance or repair work, check the entire heating installation to ensure that there are no leaks.

For the end user:

Danger
If you smell gas:

1. Do not use naked flames, do not smoke and do not operate electrical contacts or switches (doorbell, lighting, motor, lift etc).
2. Shut off the gas supply.
3. Open the windows.
4. Report any leaks immediately.
5. Evacuate the property.
6. Contact a qualified installer.

Danger
If you smell flue gases:

1. Switch the boiler off.
2. Open the windows.
3. Report any leaks immediately.
4. Evacuate the property.
5. Contact a qualified installer.

Warning
Do not touch the flue gas pipes. Depending on the boiler settings, the temperature of the flue gas pipes can rise to over 60°C.

Warning
Do not touch radiators for long periods. Depending on the boiler settings, the temperature of the radiators can rise to over 60°C.

Warning
Be careful when using the domestic hot water. Depending on the boiler settings, the temperature of domestic hot water can rise to over 65°C.

Warning
The use of the boiler and the installation by you as the end-user must be limited to the operations described in this manual. All other actions may only be undertaken by a qualified fitter/engineer.

Warning
The condensation drain must not be changed or sealed. If a condensate neutralisation system is used, the system must be cleaned regularly in accordance with the instructions provided by the manufacturer.

Caution
Ensure that the boiler is regularly serviced. Contact a qualified installer or arrange a maintenance contract for the servicing of the boiler.

Caution
Only genuine spare parts may be used.

Important
Regularly check for the presence of water and pressure in the heating installation.

1.2 Recommendations

Danger
This appliance can be used by children aged eight and above and people with a physical, sensory or mental disability, or with a lack of experience and knowledge, provided they are supervised and instructed in how to use the appliance in a safe manner and understand the associated dangers. Children must not be allowed to play with the appliance. Cleaning and user maintenance should not be carried out by children without adult supervision.

Warning
Installation and maintenance of the boiler must be carried out by a qualified installer in accordance with local and national regulations.

Warning
The installation and maintenance of the boiler must be undertaken by a qualified installer in accordance with the information in the supplied manual, doing otherwise may result in dangerous situations and/or bodily injury.

Warning
Removal and disposal of the boiler must be carried out by a qualified installer in accordance with local and national regulations.

Warning
If the mains lead is damaged, it must be replaced by the original manufacturer, the manufacturer's dealer or another suitably skilled person to prevent hazardous situations from arising.

Warning
Always disconnect the mains supply and close the main gas tap when working on the boiler.

Warning
Check the entire system for leaks after maintenance and servicing work.

Danger
For safety reasons, we recommend fitting smoke and CO alarms at suitable places in your home.

Caution

- Make sure the boiler can be reached at all times.
- The boiler must be installed in a frost-free area.
- If the power cord is permanently connected, you must always install a main bipolar switch with an opening gap of at least 3 mm (BS EN 60335-1).
- Drain the boiler and central heating system if you are not going to use your home for a long time and there is a chance of frost.
- The frost protection does not work if the boiler is out of operation.
- The boiler protection only protects the boiler, not the system.
- Check the water pressure in the system regularly. If the water pressure is lower than 0.8 bar, the system must be topped up (recommended water pressure between 1.5 and 2 bar).

Important
Keep this document near to the boiler.

Important
Only remove the casing for maintenance and repair operations. Refit all panels when maintenance work and servicing are complete.

Important
Instruction and warning labels must never be removed or covered and must be clearly legible throughout the entire service life of the boiler. Damaged or illegible instructions and warning stickers must be replaced immediately.

Important
Modifications to the boiler require the written approval of **Remeha**.

1.3 Specific safety instructions

1.3.1 Additional guidelines

In addition to the legal requirements and guidelines, the supplementary guidelines in this manual must also be followed. Supplements or subsequent regulations and guidelines that are valid at the time of installation shall apply to all regulations and guidelines specified in this manual.

1.4 Liabilities

1.4.1 Manufacturer's liability

Our products are manufactured in compliance with the requirements of the various Directives applicable. They are therefore delivered with the CE marking and any documents necessary. In the interests of the quality of our products, we strive constantly to improve them. We therefore reserve the right to modify the specifications given in this document.

Our liability as manufacturer may not be invoked in the following cases:

- Failure to abide by the instructions on installing and maintaining the appliance.
- Failure to abide by the instructions on using the appliance.
- Faulty or insufficient maintenance of the appliance.

1.4.2 Installer's liability

The installer is responsible for the installation and initial commissioning of the appliance. The installer must observe the following instructions:

- Read and follow the instructions given in the manuals provided with the appliance.
- Install the appliance in compliance with prevailing legislation and standards.
- Carry out initial commissioning and any checks necessary.
- Explain the installation to the user.
- If maintenance is necessary, warn the user of the obligation to check the appliance and keep it in good working order.
- Give all the instruction manuals to the user.

1.4.3 User's liability

To guarantee optimum operation of the system, you must abide by the following instructions:

- Read and follow the instructions given in the manuals provided with the appliance.
- Call on a qualified professional to carry out installation and initial commissioning.
- Get your installer to explain your installation to you.
- Have the required inspections and maintenance carried out by a qualified installer.
- Keep the instruction manuals in good condition close to the appliance.

2 About this manual

2.1 General

This manual describes the installation, use and maintenance of the Quinta Ace boiler. This manual is part of all the documentation supplied with the boiler.

2.2 Additional documentation

The following documentation is available in addition to this manual:

- Installation and user manual for control panel
- Water quality instructions

2.3 Symbols used

2.3.1 Symbols used in the manual

This manual uses various danger levels to draw attention to special instructions. We do this to improve user safety, to prevent problems and to guarantee correct operation of the appliance.

Danger
Risk of dangerous situations that may result in serious personal injury.

Danger of electric shock
Risk of electric shock.

Warning
Risk of dangerous situations that may result in minor personal injury.

Caution
Risk of material damage.

Important
Please note: important information.

See
Reference to other manuals or pages in this manual.

3 Technical specifications

3.1 Homologations

3.1.1 Certifications

Tab.1 Certifications

CE identification number	**PIN 0063CQ3781**
Class NOx(1)	**6**
Type of flue gas connection	B_{23P}(2)
	C_{13}, C_{33}, C_{53}

(1) EN 15502–1
(2) When installing a boiler with connection type B_{23P}, the IP rating of the boiler is lowered to IP20.

3.1.2 Unit categories

Tab.2 Unit categories

Country	Category	Gas type	Connection pressure (mbar)
Great Britain	$II_{2H3B/P}$	G20 (H gas) G30/G31 (butane/propane)	20 30-50

3.1.3 Directives

In addition to the legal requirements and guidelines, the supplementary guidelines in this manual must also be followed.

Supplements or subsequent regulations and guidelines that are valid at the time of installation shall apply to all regulations and guidelines specified in this manual.

3.1.4 Factory test

Before leaving the factory, each boiler is optimally set and tested for:

- Electrical safety.
- Adjustment of (O_2/CO_2).
- Water tightness.
- Gas tightness.
- Parameter setting.

3.2 Technical data

Tab.3 General

Quinta Ace			160
Nominal output (Pn) for central heating operation (80°C/60°C)	min. - max. (1)	kW	31.5 - 152.1 152.1
Nominal output (Pn) for central heating operation (50°C/30°C)	min. - max. (1)	kW	34.7 - 161.6 161.6
Nominal input (Qnh) central heating operation (Hi) G20 (H gas)	min. - max. (1)	kW	32.0 - 156.0 156.0
Nominal input (Qnh) central heating operation (Hi) G31 (Propane)	min. - max.	kW	40.0 - 156.0
Nominal input (Qnh) central heating operation (Hs) G20 (H gas)	min. - max. (1)	kW	35.6 - 173.3 173.3
Nominal input (Qnh) central heating operation (Hs) G31 (Propane)	min. - max.	kW	43.4 - 169.6

Quinta Ace			160
Full load central heating efficiency (Hi) (80/60 °C) (92/42/EEC)		%	97.5
Full load central heating efficiency (Hi) (50°C/30°C) (EN15502)		%	103.6
Part load central heating efficiency (Hi) (return temperature 60°C)		%	98.4
Part load central heating efficiency (92/42/EEC) (return temperature 30°C)		%	108.5
(1) Factory setting.			

Tab.4 Gas and flue gas data

Quinta Ace			160
Gas inlet pressure G20 (H gas)	min. - max.	mbar	17 - 25
Gas inlet pressure G31 (propane)	min. - max.	mbar	37 - 50
Gas consumption G20 (H gas)(1)	min. - max.	m^3/h	3.4 - 16.5
Gas consumption G31 (propane)(1)	min. - max.	m^3/h	1.4 - 6.3
BREEAM NO_X		mg/kWh	36
Flue gas mass flow rate	min. - max.	kg/h g/s	57 - 277 16 - 77
Flue gas temperature	min. - max.	°C	32 - 66
Maximum counter pressure		Pa	200
(1) Gas consumption based on lower heating value under standard conditions: T=288.15 K, p=1013.25 mbar. Gag 30.33; G25 29.25; G31 88.00 MJ/m^3			

Tab.5 Central heating circuit data

Quinta Ace			160
Water content		l	17
Water operating pressure	min	bar	0.8
Water operating pressure (PMS)	max	bar	4.0
Water temperature	max	°C	110
Operating temperature	max	°C	90
Pressure drop secondary circuit (ΔT=20 K)		mbar	170

Tab.6 Electrical data

Quinta Ace			160
Supply voltage		V~	230
Power consumption – full load	max	W	275
Power consumption – low load	min	W	47
Power consumption – standby	min	W	5.3
Electrical protection index		IP	IPX1B
Fuses	Main	A A	6.3 1.6

Tab.7 Other data

Quinta Ace			160
Total weight (empty)		kg	147
Minimum mounting weight (without front panel)		kg	123
Average acoustic level at a distance of one metre from the boiler		dB(A)	59.5

Tab.8 Technical parameters

Quinta Ace			160
Condensing boiler			Yes
Low-temperature boiler(1)			No
B1 boiler			No

Quinta Ace			160
Cogeneration space heater			No
Combination heater			No
Rated heat output	*Prated*	kW	152
Useful heat output at nominal heat output and high temperature operation(2)	P_4	kW	152.1
Useful heat output at 30% of rated heat output and low temperature regime(1)	P_1	kW	50.8
Seasonal space heating energy efficiency	η_s	%	-
Useful efficiency at rated heat output and high temperature regime(2)	η_4	%	87.8
Useful efficiency at 30% of rated heat output and low temperature regime(1)	η_1	%	97.8
Auxiliary electricity consumption			
Full load	*elmax*	kW	0.275
Part load	*elmin*	kW	0.047
Standby mode	P_{SB}	kW	0.005
Other items			
Standby heat loss	P_{stby}	kW	0.191
Ignition burner power consumption	P_{ign}	kW	-
Annual energy consumption	Q_{HE}	kWh GJ	-
Sound power level, indoors	L_{WA}	dB	68
Emissions of nitrogen oxides	NO_X	mg/kWh	35

(1) Low temperature means 30°C for condensing boilers, 37°C for low temperature boilers and 50°C (at heater inlet) for other heating appliances.
(2) High temperature operation means 60°C return temperature at heater inlet and 80°C feed temperature at heater outlet.

See
Refer to the back cover for contact details.

3.3 Dimensions and connections

Fig.1 Dimensions

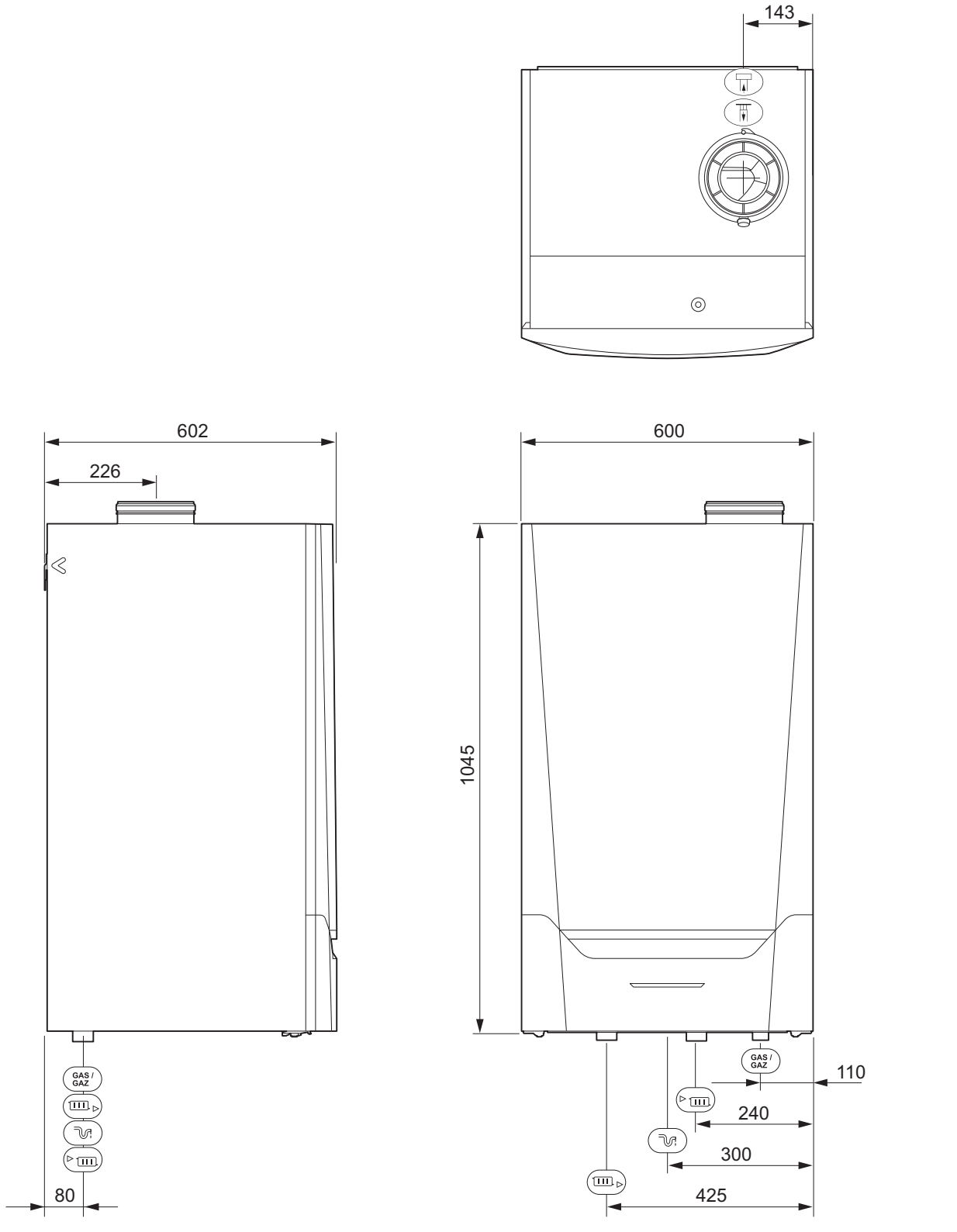

- Flue gas outlet connection; Ø 100 mm
- Air supply connection; Ø 150 mm
- Siphon connection
- CH flow connection; 1¼ inch male thread
- CH return connection; 1¼ inch male thread
- GAS / GAZ Gas connection; 1 inch male thread

3.4 Electrical diagram

Fig.2 Electrical diagram

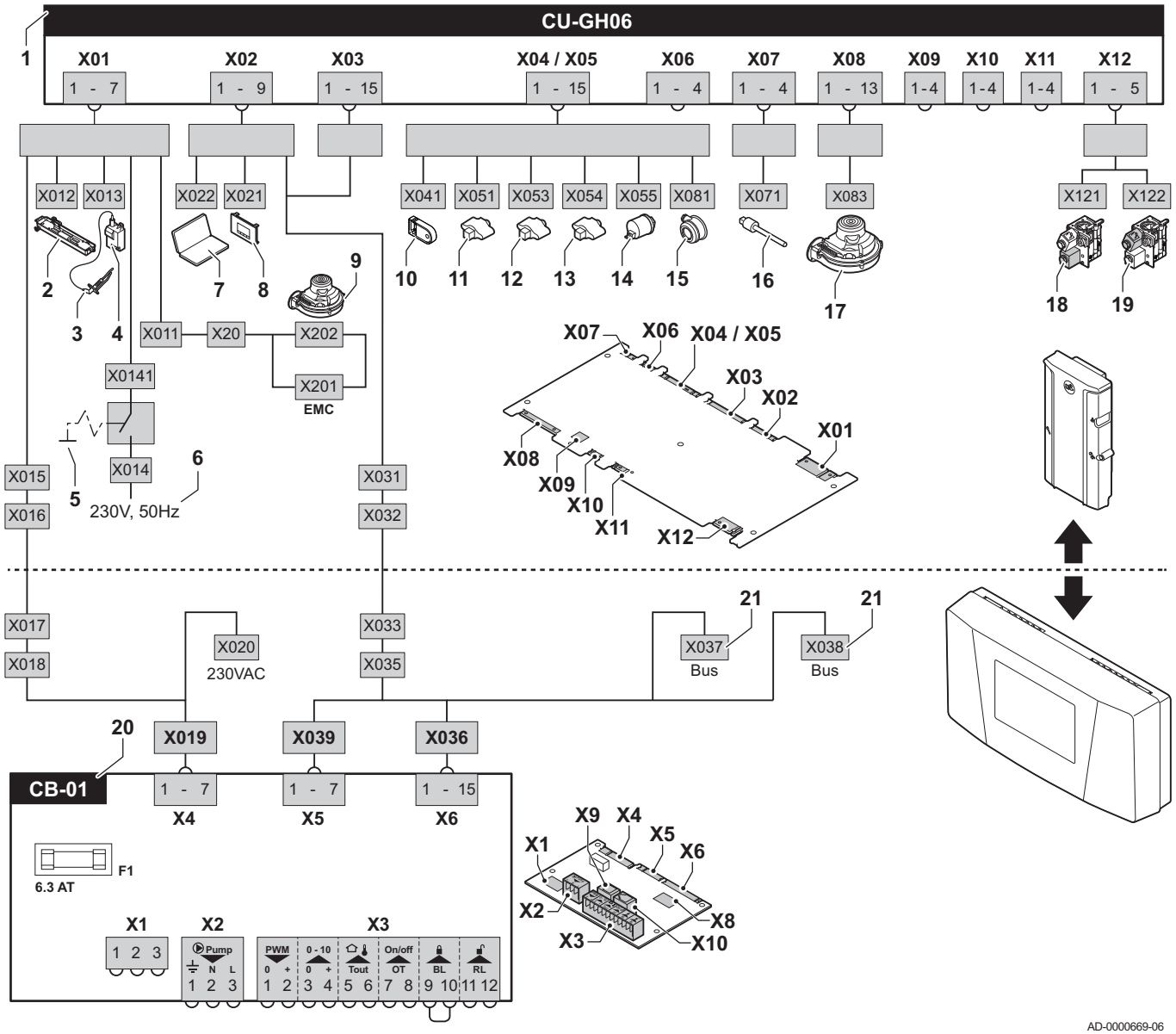

1 Control unit
2 Lighting
3 Ignition pin
4 Ignition transformer
5 On/off switch
6 Power supply
7 Service connector / computer connection
8 Control panel
9 Fan supply
10 Storage parameter
11 Flow sensor
12 Heat exchanger sensor
13 Return sensor
14 Hydraulic pressure sensor
15 Air pressure differential switch
16 Flue gas sensor
17 Fan control
18 Gas valve 1
19 Gas valve 2
20 Standard PCB
21 L-bus connections for additional PCBs

4 Description of the product

The Quinta Ace boiler is delivered with a combination of the control panel, control unit and extension PCB. The contents of this manual are based on the following software and navigation information:

Tab.9 Software and navigation information

	Name visible in display	Software version
Boiler **Quinta Ace**	FSB-WHB-HE-150-300	01.07
Control panel **HMI S-control**	HMI	02.01
PCB **SCB-01**	SCB-01	00.02

4.1 General description

The Quinta Ace boiler is a high-efficiency wall-hung gas boiler with the following properties:

- High-efficiency heating.
- Limited emissions of polluting substances.
- Ideal choice for cascade configurations.

4.2 Operating principle

4.2.1 Gas/air regulation

The boiler is equipped with a casing that also serves as an air box. The fan draws in the combustion air. The gas is injected into the venturi and mixed with the combustion air. The fan speed is controlled on the basis of the settings, the heat demand and the prevailing temperatures measured by the temperature sensors. The gas/air ratio control ensures an accurate mixture of the required amounts of gas and air. This provides optimum combustion over the entire heat input range. The gas/air mixture goes to the burner, where it is ignited by the ignition electrode.

Important
The combustion air supply is checked before each burner start, and at least once every 24 hours. During continuous operation (e.g. supplying process water), please note that the boiler control will reset every 24 hours.

4.2.2 Combustion

The burner heats the central heating water flowing through the heat exchanger. If the temperature of the flue gases is lower than the dew point (approx. 55°C), the water vapour condenses in the heat exchanger. The heat released during this condensation process (referred to as the latent or condensation heat) is also transferred to the central heating water. The cooled flue gases are discharged through the flue gas discharge pipe. The condensed water is discharged through a siphon.

4.2.3 Control system

The **e-Smart** electronic control system ensures that your heating system is smart and reliable. This means that the boiler responds practically to negative environmental influences (such as limited water flow and air flow problems). In the event of such influences, the boiler will not go into lockout mode, but in the first instance will modulate back. Depending on the nature of the circumstances, a warning, blocking or lock-out may occur. The boiler continues to supply heat provided the situation is not dangerous. With this control system, your boiler is also equipped for remote control and monitoring.

4.2.4 Control

- **On/off control**
  The heat input varies between the minimum and the maximum values on the basis of the flow temperature set on the boiler. It is possible to connect a 2-wire on/off thermostat or a power stealing thermostat to the boiler.
- **Modulating control**
  The heat input varies between the minimum and the maximum values on the basis of the flow temperature determined by the modulating controller. The boiler output can be modulated with an appropriate modulating controller.
- **Analogue control (0 - 10 V)**
  The heat input varies between the minimum and the maximum values on the basis of the voltage present at the analogue input.

4.2.5 Regulating the water temperature

The boiler is fitted with an electronic temperature control with a flow and return temperature sensor. The flow temperature can be adjusted between 20°C and 90°C. The boiler modulates back when the set flow temperature is reached. The switch-off temperature is the set flow temperature + 5°C.

4.2.6 Protection against shortage of water

The boiler is fitted with low water level protection based on temperature measurements. By modulating back when the water flow threatens to become insufficient, the boiler remains operational as long as possible. The boiler issues a warning in the event of no or too little water. With an insufficient flow $\Delta T \geq 25$ K or too great an increase in the heat exchanger temperature sensor, the boiler goes into blocking mode.

4.2.7 Water flow

The modulating control of the boiler limits the maximum difference between the flow temperature and return temperature. In addition, a heat exchanger temperature sensor is mounted to monitor the minimum water flow. This limits the maximum increase in the heat exchanger temperature and monitors the maximum temperature difference between the flow, return and heat exchanger temperatures. As a result, the boiler is not affected by low water flow.

4.2.8 Hydraulic pressure sensor

The hydraulic pressure sensor records the water pressure in the boiler. Change the threshold value for the hydraulic pressure sensor using parameter **AP006**.

For more information, see
Parameters - FSB-WHB-HE-150-300, page 50
Changing the parameters, page 49

4.2.9 Air pressure differential switch

The air pressure differential switch is a protection against a blocked trap or blocked air supply/flue gas outlet.

Before start-up and when the boiler is in operation, the air pressure differential switch **APS** measures the difference in pressure between the measuring points on the condensate collector p^+ and the air box p^-. If the pressure difference is greater than 6 mbar, then the boiler will lock out. After eliminating the cause of the breakdown, the boiler can be unlocked.

Fig.3 Water resistance

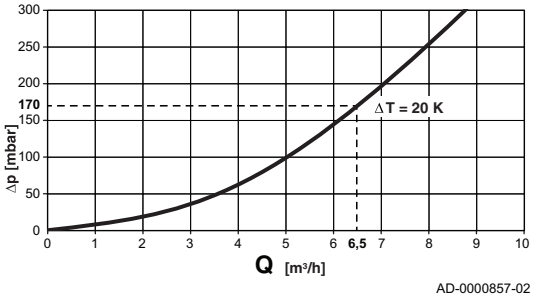

4.2.10 Circulating pump

ΔP Boiler resistance (mbar)
Q Flow rate (m^3/h)

The boiler is supplied without a pump. Take the boiler resistance and system resistance into account when selecting a pump.

See
Technical data, page 13.

Caution
Maximum power consumption may be 300 VA. Use an auxiliary relay for a pump with greater power.

4.2.11 Calorifier connection

A calorifier can be connected to the boiler. Our range includes various calorifiers.

Important
Contact us for more information.

4.2.12 Cascade system

The boiler is ideally suited for a cascade system. There are a number of standard solutions available.

Important
Contact us for more information.

4.3 Main components

Fig.4 Main components

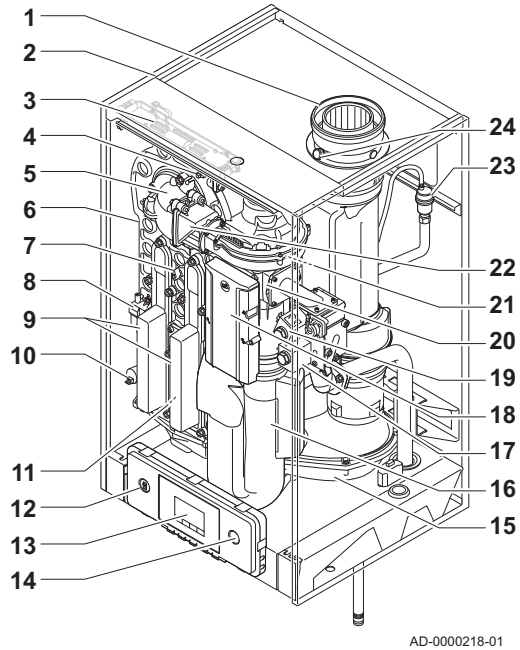

1 Air supply/flue gas discharge
2 Casing/air box
3 Interior light
4 Flow sensor
5 Adapter
6 Heat exchanger
7 Temperature sensor for heat exchanger
8 Ignition transformer
9 Inspection hatch for heat exchanger (x2)
10 Water pressure sensor
11 Return sensor
12 PC/laptop connection point
13 Control panel
14 On/off switch
15 Condensate collector
16 Air inlet silencer
17 Gas pressure measuring point
18 Control unit (CU-GH)
19 Gas valve unit
20 Venturi
21 Fan
22 Non-return valve
23 Automatic air vent
24 Flue gas measuring point

4.4 Control panel description

Fig.5 Control panel

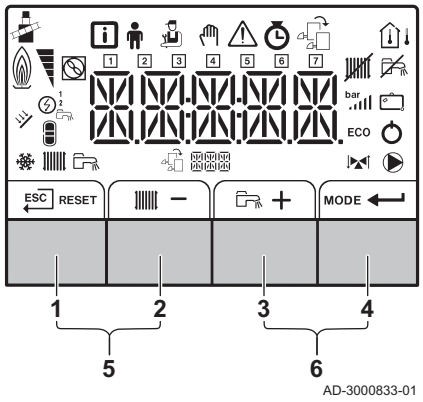

4.4.1 What each key means

1 ESC Escape: Back to the previous level.

RESET Reset: Manual reset.

2 CH flow temperature Access to set temperature.

—Min. key: Lowering the value.

3 DHW temperature: Access to set temperature.

+ Plus key: Raising the value.

4 MODE CH/DHW function: Toggles function ON/OFF

↵ Enter key: Confirms selection or value.

5 Chimney-sweeping keys

Important
Press the **1** and **2** keys simultaneously.

6 Menu keys

Important
Press the **3** and **4** keys simultaneously.

4.4.2 Meaning of the symbols on the display

Tab.10 Possible symbols in the display (depending on available devices or functions)

	Chimney sweep mode is enabled (forced full load or part load for O_2/CO_2 measurement).
	Information menu: read out various current values.
	User menu: user-level parameters can be configured.
	Installer menu: installer level parameter can be configured.
	Manual mode menu: manual mode can be configured.
	Error menu: errors can be read out.
	Hour counter/timer program/time display menu.
	Control PCB menu: (optional) control PCBs can be read out.
	The outside temperature sensor is connected.
	The room temperature sensor is connected.
	The burner output level (1 to 5 bars, with each bar representing 20% output)
	The heat pump is switched on.
1 - 7	Day display
	Central heating operation is switched off.
	DHW operation is switched off.
	The solar boiler is on and its heat level is displayed.
bar	System water pressure display.
	The holiday program is enabled.
	Frost protection operation is enabled.
	CH operation is enabled.
	DHW operation is enabled.
	Displaying the selected PCB.
	The three-way valve is switched on.
	The circulation pump is turning.

ECO	ECO mode operation is enabled.
⏻	Switch the appliance off then on again.

4.5 Standard delivery

Tab.11 The delivery includes 2 packages

One package with:	One package with:
• The boiler, with mains lead	• Suspension bracket and fasteners for wall mounting • Mounting template • Siphon with condensate drain hose • Connection box with connector for external connections, including: - Standard control PCB **CB-01** - Expansion board **SCB-01** • Connection cables (230 V and 24 V) for connection between the connection box and boiler • Sticker: This central heating unit is set for... • Documentation

Important
This manual only deals with the standard scope of supply. For the installation or mounting of any accessories delivered with the boiler, refer to the corresponding mounting instructions.

4.6 Accessories and options

Various accessories can be obtained for the boiler.

Important
Contact us for more information.

5 Before installation

5.1 Installation regulations

Warning
The installer must be registered with Gas Safe and have the correct ACS qualifications.

Important
Practical guidelines - see the latest version.

5.2 Lifting instruction

The weight of the boiler exceeds the maximum lift weight for one person. We recommend the use of a lifting aid.

Fig.6 Lifting aids

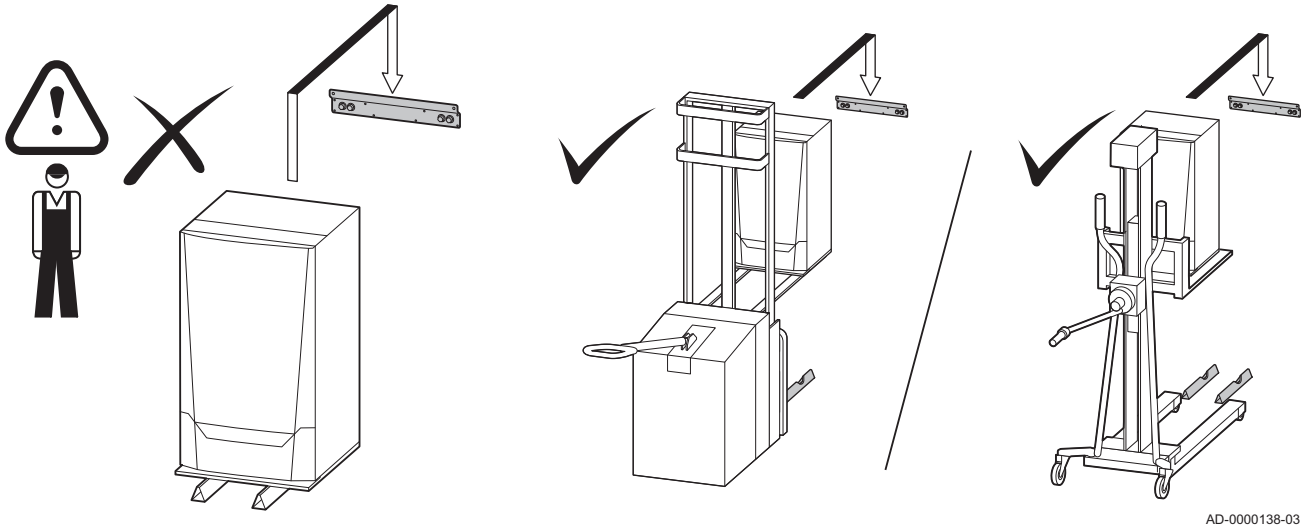

AD-0000138-03

5.3 Choice of the location

5.3.1 Type plate

Fig.7 Position of type plate

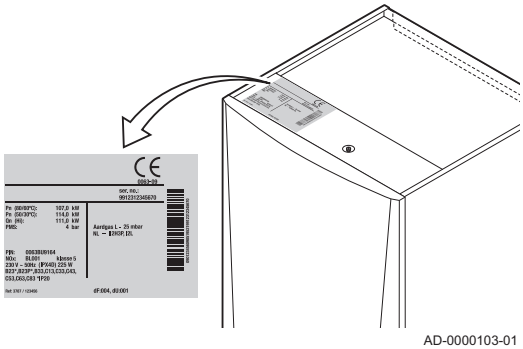

AD-0000103-01

The type plate on top of the boiler features the boiler serial number and important boiler specifications, for example the model and unit category. The factory setting codes CN 1 and CN 2 are also stated on the type plate.

5.3.2 Location of the boiler

Fig.8 Installation area

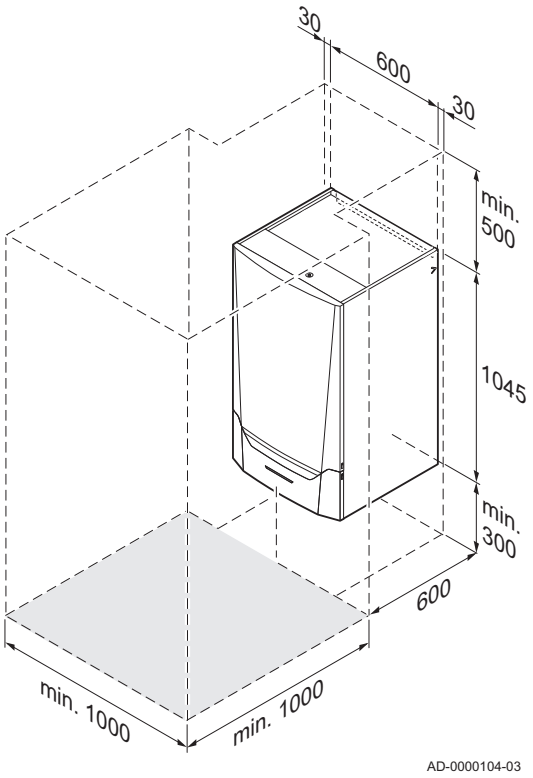

- Use the guidelines and the required installation space as a basis for determining the correct place to install the boiler.
  When determining the correct installation space, take account of the permitted position of the flue gas discharge and/or air supply outlet.
- Ensure that there is sufficient space around the boiler for good access and ease of maintenance.

Danger
It is forbidden to store, even temporarily, combustible products and substances in the boiler or near the boiler.

Caution

- Mount the boiler on a strong and solid wall (at least half-brick brickwork with calcium silicate bricks). Build a reinforcing structure if necessary.
- The boiler must be installed in a frost-free area.
- The boiler must have an earthed electrical connection.
- A connection to the drain must be present for the condensate drain close to the boiler.
- The specified minimum space is required for standard maintenance work. For installation and extensive servicing work, there must be at least 1 m x 1 m of clear space in front of the boiler.

Caution
If the power cord is permanently connected, you must always install a main bipolar switch with an opening gap of at least 3 mm (BS EN 60335-1).

5.4 Transport

Fig.9 Boiler package

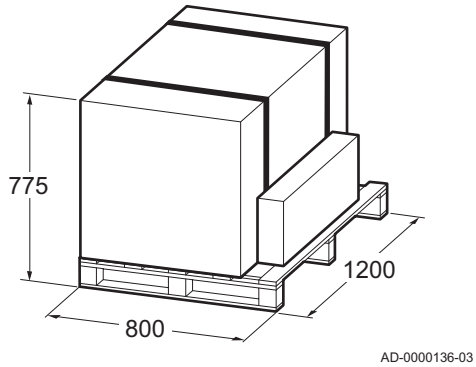

The boiler is delivered on a pallet. The delivery includes 2 packages. One package with the boiler and one package with individual parts and technical documentation. Without the packaging, the boiler will fit through all standard doorways.

Important
Always transport the boiler as close to the installation site as possible before the packaging is removed.

5.5 Unpacking & initial preparation

Fig.10 Unpacking the boiler

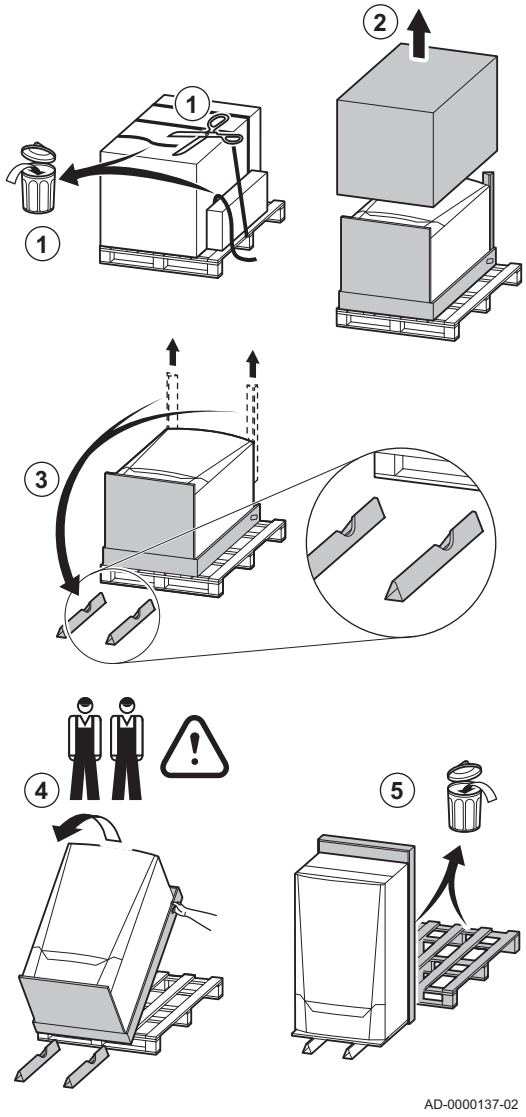

1. Cut the packaging straps and remove.
2. Remove the cardboard box.
3. Take the 2 floor stands out of the packaging and place them on the floor in front of the bottom of the boiler.
4. With 2 people, place the boiler upright on the floor stands.
5. Remove the pallet and the rest of the packaging.

Important
The boiler can now be moved with a lifting aid.

6 Installation

6.1 General

Warning
The boiler must be installed by a qualified installer in accordance with local and national regulations.

6.2 Preparation

6.2.1 Positioning the boiler

Fig.11 Mounting the boiler

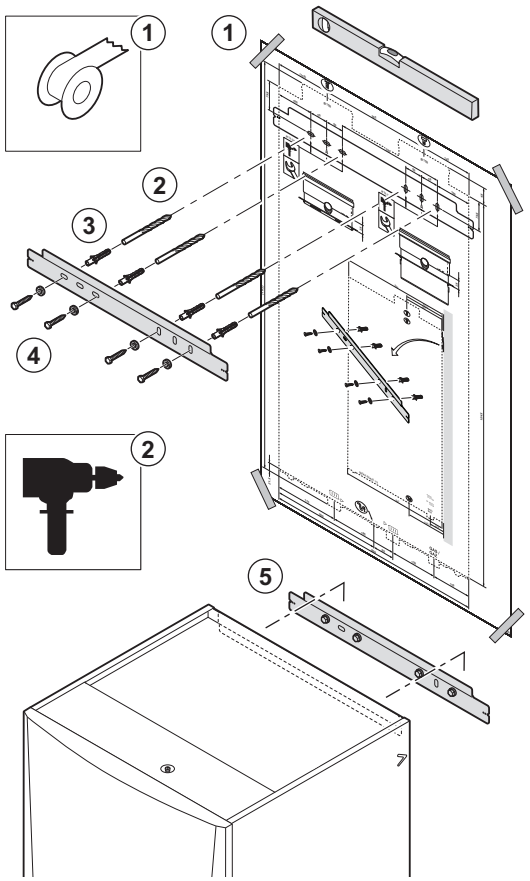

The fitting bracket on the back of the casing can be used to mount the boiler directly on the suspension bracket.

The boiler is supplied with a mounting template.

1. Attach the mounting template of the boiler to the wall using adhesive tape.

Warning
- Use a level to check whether the mounting template is hanging perfectly horizontally.
- Protect the boiler against building dust and cover the flue gas outlet and air supply connection points. Only remove this cover to assemble the relevant connections.

2. Drill 4 holes of Ø 10 mm.
3. Fit the Ø 10 mm plugs.
4. Attach the suspension bracket to the wall with the Ø 10 mm bolts supplied.
5. Mount the boiler on the suspension bracket at the level of the arrows on the side of the boiler.

Warning
- The weight of the boiler exceeds the maximum lift weight for one person. Observe the applicable regulations. We recommend the use of a lifting aid. Please ensure all necessary care is taken when lifting the boiler on to the wall mounting bracket.
- The plugs supplied are only suitable for concrete. Select the correct plugs for installation on other materials.

6.3 Hydraulic connections

6.3.1 Rinsing the system

The installation must be cleaned and flushed in accordance with BS 7593 (2006) and BSRIA BG 33/2014.

Before a new boiler can be connected to an existing or new system, the entire system must be thoroughly cleaned and flushed. This step is absolutely crucial. The flushing helps to remove residue from the installation process (weld slag, fixing products etc.) and accumulations of dirt (silt, mud etc.)

Important
- Flush the system with a volume of water equivalent to at least three times the volume of the system.
- Flush the DHW pipes with at least 20 times the volume of the pipes.

Important
Due to the presence of an aluminium heat exchanger, suitable chemicals and the correct use of these chemicals should be discussed with specialist water treatment companies.

6.3.2 Connecting the heating circuit

Fig.12 Connecting the CH flow

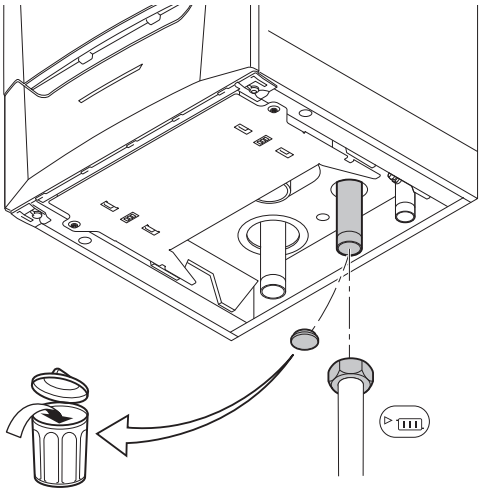

AD-0000108-01

1. Remove the dust cap from the CH flow connection ▸ at the bottom of the boiler.

Fig.13 Connecting the CH return

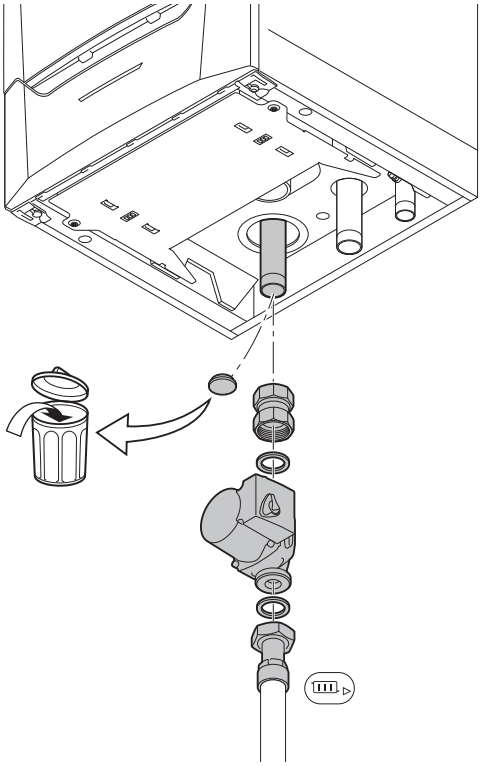

AD-0000109-01

2. Fit the outlet pipe for CH water to the CH flow connection.
3. Remove the dust cap from the CH return connection ▸ at the bottom of the boiler.
4. Fit the inlet pipe for CH water to the CH return connection.
5. For filling and tapping the boiler, install a filling and drain cock in the CH return pipe.
6. Install the system pump in the CH return pipe.

See
For the electrical connection of the system pump: Connecting the system pump, page 37

Important
Fit a service shut-off valve in the CH flow pipe and the CH return pipe to facilitate servicing work.

Caution
- When fitting service shut-off valves, position the filling and drain valve, the expansion vessel and the safety valve between the shut-off valve and the boiler.
- If using plastic pipes, follow the manufacturer's (connection) instructions.

6.3.3 Connecting the expansion vessel

1. Ensure that there is an expansion vessel with the correct volume and inlet pressure.
2. Fit the expansion vessel on the central heating return pipe ▸.

6.3.4 Connecting the condensate drain pipe

Fig.14 Connecting the condensate drain

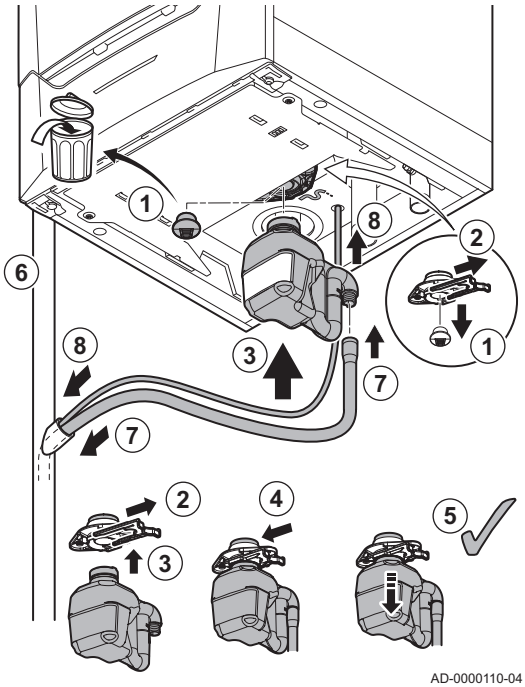

The siphon is supplied separately with the boiler as standard (including a flexible plastic drain hose and a transparent extension hose for the automatic air vent). Fit these parts under the boiler.

1. Remove the dust cap from the siphon connection at the bottom of the boiler.
2. Pull the retainer clip of the siphon sidewards.
3. Push the siphon firmly into the designated opening.
4. Push the retainer clip of the siphon forwards.
5. Check whether the siphon is firmly fitted in the boiler.
6. Fit a plastic drain pipe of Ø 32 mm or larger, terminating in the drain.
7. Attach the siphon hose supplied to the output of the siphon and insert the other end into the plastic drain pipe.
8. Push the transparent hose supplied into the connecting grommet of the automatic air vent and insert the other end into the plastic drain pipe.
9. Fit a stench-trap or siphon in the drain pipe.

Important
The air opening on the siphon prevents siphoning when the drain pipe is securely connected to the drain.

Danger
The siphon must always be filled with water. This prevents flue gases from entering the room.

Caution
- Never seal the condensate drain.
- The drain pipe must slope down at least 30 mm per metre, the maximum horizontal length is 5 metres.
- Condensed water must not be discharged into a gutter.

6.4 Gas connection

Warning
- Before starting work on the gas pipes, turn off the main gas tap. Before installing, check that the gas meter has sufficient capacity. Take into account the consumption of all appliances.
- Notify the local energy company if the gas meter has insufficient capacity.

Fig.15 Connecting the gas pipe

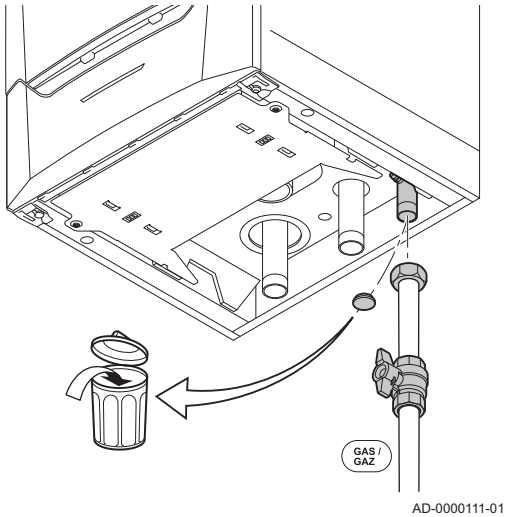

1. Remove the dust cap from the gas supply pipe GAS/GAZ at the bottom of the boiler.
2. Fit the gas supply pipe.
3. Fit a gas tap in this pipe, directly underneath the boiler.
4. Fit the gas pipe to the gas tap.

Caution
- Remove dirt and dust from the gas pipe.
- Always perform welding work at a sufficient distance from the boiler.

Important
We recommend installing a gas filter to prevent clogging of the gas valve unit.

6.5 Air supply/flue gas connections

The boiler is suitable for the following types of flue gas connections:

6.5.1 Classification

Important

- The installer is responsible ensuring that the right type of flue gas outlet system is used and that the diameter and length are correct.
- Always use connection materials, roof terminal and/or outside wall terminal supplied by the same manufacturer. Consult the manufacturer for compatibility details.

Tab.12 Type of flue gas connection: B_{23P}

Principle	Description	Permitted manufacturers(1)
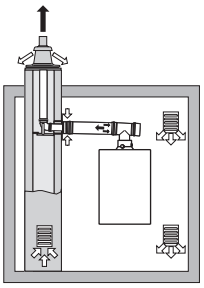 AD-3000924-01	Room-ventilated version • Without down-draught diverter. • Flue gas discharge via the roof. • Air from the installation area. • The IP rating of the boiler is lowered to IP20.	Connection material and roof terminal: • Muelink & Grol
(1) The material must also satisfy the material property requirements from the relevant chapter.		

Tab.13 Type of flue gas connection: C_{13}

Principle	Description	Permitted manufacturers(1)
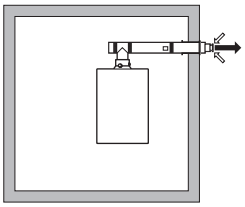 AD-3000926-01	Room-sealed version • Discharge in the outside wall. • Air supply opening is in the same pressure zone as the discharge (e.g. a combined outside wall terminal). • Parallel not permitted.	Outside wall terminal and connection material: • Remeha, combined with connection material from Muelink & Grol • Muelink & Grol
(1) The material must also satisfy the material property requirements from the relevant chapter.		

Tab.14 Type of flue gas connection: C_{33}

Principle	Description	Permitted manufacturers(1)
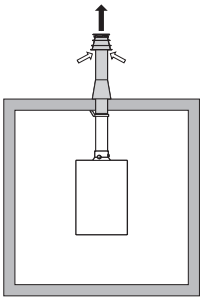 AD-3000927-01	Room-sealed version • Flue gas discharge via the roof. • Air supply opening is in the same pressure zone as the discharge (e.g. a concentric roof terminal).	Roof terminal and connection material • Muelink & Grol
(1) The material must also satisfy the material property requirements from the relevant chapter.		

Tab.15 Type of flue gas connection: C_{53}

Principle	Description	Permitted manufacturers(1)
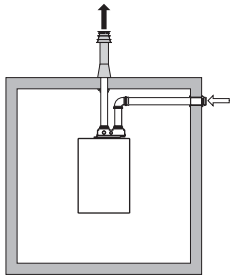 AD-3000929-02	Connection in different pressure zones • Closed unit. • Separate air supply duct. • Separate flue gas discharge duct. • Discharging into various pressure areas. • The air supply and the flue gas outlet must not be placed on opposite walls.	Connection material and roof terminal: • Muelink & Grol
(1) The material must also satisfy the material property requirements from the relevant chapter.		

6.5.2 Material

Use the string on the flue gas outlet material to check whether it is suitable for use on this appliance.

Fig.16 Sample string

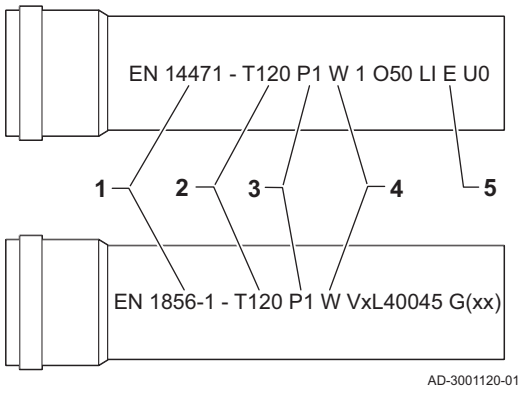

1 **EN 14471 of EN 1856–1**: The material is CE approved according to this standard. For plastic this is EN 14471, For aluminium and stainless steel this is EN 1856-1.
2 **T120**: The material has temperature class T120. A higher number is also allowed, but not lower.
3 **P1**: The material falls into pressure class P1. H1 is also allowed.
4 **W**: The material is suitable for draining condensation water (W=’wet’). D is not allowed (D=’dry’).
5 **E**: The material falls into fire resistance class E. Class A to D are also allowed, F is not allowed. Only applicable to plastic.

Warning

- The coupling and connection methods may vary depending on the manufacturer. It is not permitted to combine pipes, coupling and connection methods from different manufacturers. This also applies to roof feed-throughs and common channels.
- The materials used must comply with the prevailing regulations and standards.
- Please contact us to discuss using flexible flue gas outlet material.

Tab.16 Overview of material properties

Version	Flue gas outlet		Air supply	
	Material	Material properties	Material	Material properties
Single-wall, rigid	• Plastic(1) • Stainless steel(2) • Thick-walled, aluminium(2)	• With CE marking • Temperature class T120 or higher • Condensate class W (wet) • Pressure class P1 or H1 • Fire resistance class E or better(3)	• Plastic • Stainless steel • Aluminium	• With CE marking • Pressure class P1 or H1 • Fire resistance class E or better(3)
(1) according to EN 14471 (2) according to EN 1856 (3) according to EN 13501-1				

6.5.3 Dimensions of flue gas outlet pipe

Warning
The pipes connected to the flue gas adapter must satisfy the following dimension requirements.

Fig.17 Dimensions of concentric connection

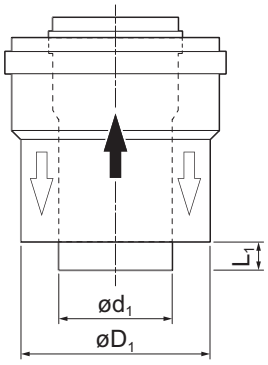

AD-3000962-01

d_1 External dimensions of flue gas outlet pipe
D_1 External dimensions of air supply pipe
L_1 Length difference between flue gas outlet pipe and air supply pipe

Tab.17 Dimensions of pipe

	d_1 (min-max)	D_1 (min-max)	L_1(1) (min-max)
100/150 mm	99.3 - 100.3 mm	149 - 151 mm	0 - 15 mm
(1) Shorten the inner pipe if the length difference is too great.			

6.5.4 Length of the air and flue gas pipes

Important
- When using bends, the maximum chimney length (L) must be shortened according to the reduction table.
- The boiler is also suitable for longer chimney lengths and diameters other than those specified in the tables. Contact us for more information.

■ Room-ventilated model (B_{23P})

Fig.18 Room-ventilated version

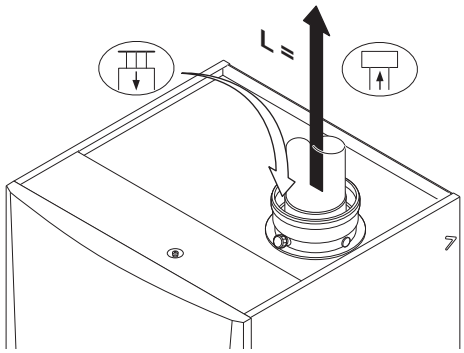

AD-0000220-01

L Length of the flue gas outlet channel to roof feed-through
Connecting the flue gas outlet
Connecting the air supply

With a room-ventilated version, the air supply opening stays open; only the flue gas outlet opening is connected. This will ensure that the boiler obtains the necessary combustion air directly from the installation area. Use adapters when using air supply and flue gas outlet pipes with diameters other than 150 mm.

Caution
- The air supply opening must stay open.
- The installation area must be equipped with the necessary air supply openings. These openings must not be obstructed or shut off.
- If the boiler is operated in a dusty environment (e.g. during the construction phase), use of an air inlet filter is necessary.

Tab.18 Maximum chimney length (L)

Diameter	90 mm	100 mm	110 mm	130 mm	150 mm
Quinta Ace 160	5 m	8 m	15 m	37 m	40 m(1)
(1) With retention of the maximum flue length it is possible to apply an extra 5 times 90º or 10 times 45º elbows.					

■ Room-sealed model (C_{13}, C_{33})

Fig.19 Room-sealed version

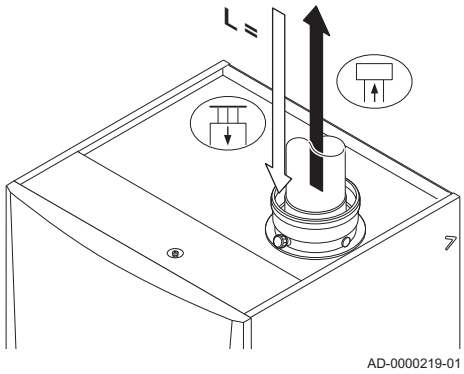

L Length of the concentric flue gas outlet channel to roof feed-through

Connecting the flue gas outlet

Connecting the air supply

With a room-sealed version, both the flue gas outlet and the air supply openings are connected (concentrically). Use adapters when using air supply and flue gas outlet pipes with diameters other than 100/150 mm.

Tab.19 Maximum chimney length (L)

Diameter	100/150 mm	130/200 mm	150/220 mm
Quinta Ace 160	1 m	12 m	20 m(1)
(1) Retaining the maximum chimney length, it is possible to use an extra 5 x 90º or 10 x 45º elbows.			

■ Connection in different pressure areas (C_{53})

Fig.20 Different pressure zones

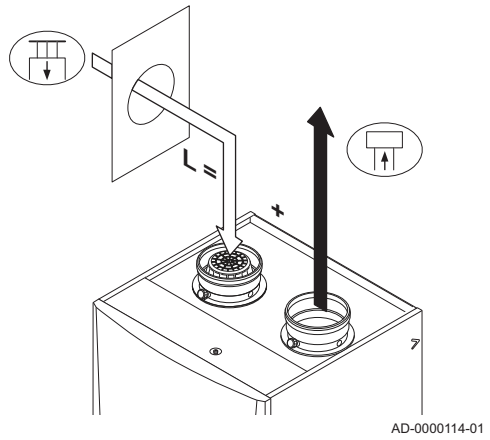

L Total length of the flue gas outlet and air supply duct

Connecting the flue gas outlet

Connecting the air supply

Combustion air supply and flue gas discharge are possible in different pressure areas and semi-CLV systems, with the exception of the coastal area. The maximum permitted height difference between the combustion air supply and the flue gas outlet is 36 m.

Tab.20 Maximum chimney length (L)

Diameter	90 mm	100 mm	110 mm	130 mm	150 mm
Quinta Ace 160	-	-	9 m	27 m	40 m(1)
(1) With retention of the maximum flue length it is possible to apply an extra 5 times 90º or 10 times 45º elbows.					

■ Reduction table

Tab.21 Pipe reduction for each element used (parallel)

Diameter	80 mm	90 mm	100 mm	110 mm	130 mm	150 mm	250 mm	300 mm
45° bend	1.2 m	1.3 m	1.4 m	1.5 m	1.0 m	1.2 m	2.0	2.4
90° bend	4.0 m	4.5 m	4.9 m	5.4 m	1.8 m	2.1 m	3.5	4.2

Tab.22 Pipe reduction for each element used (concentric)

Diameter	80/125 mm	100/150 mm	130/200 mm	150/220 mm
45° bend	1.0 m	1.0 m	1.5 m	1.5 m
90° bend	2.0 m	2.0 m	3.0 m	3.0 m

6.5.5 Additional guidelines

■ Installation

- For installing the flue gas outlet and air supply materials, refer to the instructions of the manufacturer of the relevant material. After installation, check at least all flue gas outlet and air supply parts for tightness.

Warning
If the flue gas outlet and air supply materials are not installed in accordance with the instructions (e.g. not leak-proof, not correctly bracketed), this can result in dangerous situations and/or physical injury.

- Make sure that the flue gas outlet pipe towards the boiler has a sufficient gradient (at least 50 mm per metre) and that there is a sufficient condensate collector and discharge (at least 1 m before the outlet of the boiler). The bends used must be larger than 90° to guarantee the gradient and a good seal on the lip rings.

■ Condensation

- Direct connection of the flue gas outlet to structural ducts is not permitted because of condensation.
- If condensate from a plastic or stainless steel pipe section can flow back to an aluminium part in the flue gas outlet, this condensate must be discharged via a collector before it reaches the aluminium.

Important
Contact us for more information.

6.5.6 Specific air and flue gas applications

Important
If the boiler is used in a flue gas overpressure cascade, this must be stated on the sticker supplied: This central heating unit is set for... This sticker must be affixed on top of the boiler next to the type plate.
Contact us for more information.

6.5.7 Connecting the flue gas outlet and air supply

Fig.21 Connecting the flue gas outlet and air supply

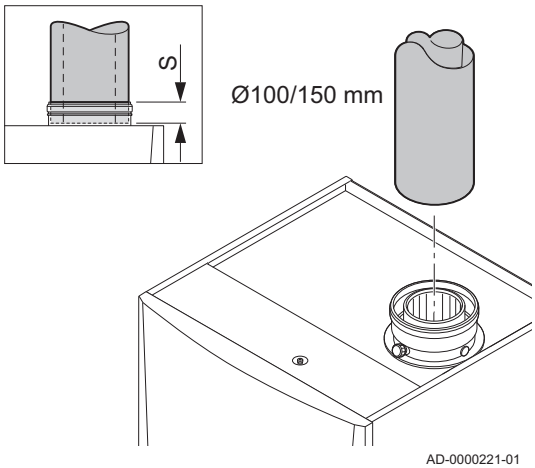

S insertion depth 50 mm

1. Fit the flue gas outlet pipe to the boiler.
2. Fit the subsequent flue gas outlet pipes and air supply pipes in accordance with the manufacturer's instructions.

Caution
- The pipes must be flue gas-tight and corrosion-resistant.
- The flue gas outlet pipe must be smooth and deburred.
- Connect the pipes so that they are stress-free.
- The pipes must not rest on the boiler.
- Fit the horizontal parts sloping down towards the boiler, with a slope of 50 mm per metre.

6.6 Electrical connections

6.6.1 Recommendations

Warning

- Electrical connections must always be made with the power supply disconnected and only by qualified installers.
- The boiler is completely pre-wired. Never change the internal connections of the control panel.
- Always connect the boiler to a well-earthed installation.

Establish the electrical connections in accordance with:

- The instructions of the current standards.
- The instructions of the wiring diagrams supplied with the boiler.
- The recommendations in this manual.
- Separate the sensor cables from the 230 V cables

6.6.2 Control unit

Fig.22 Connectors from the control unit CU-GH06 (front view)

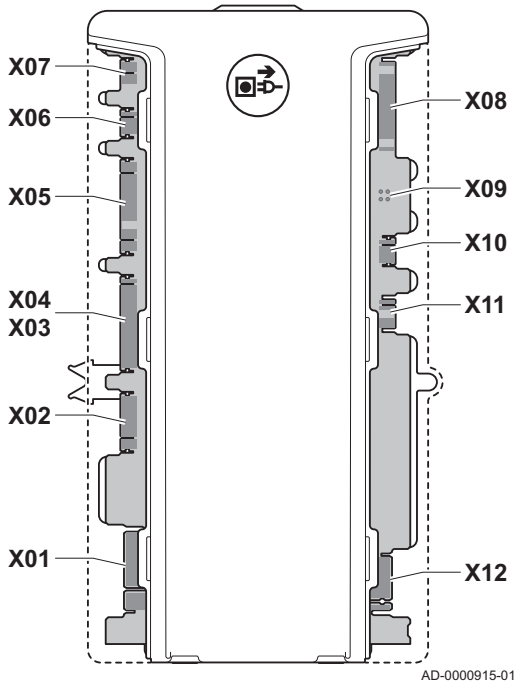

The table gives important connection values for the control unit.

Supply voltage	230 VAC/50 Hz
Main fuse value F1 (230 VAC)	6.3 AT
Fan	230 VAC

Danger of electric shock

The following components of the boiler are connected to a 230 V power supply:

- (Electrical connection for) circulating pump
- (Electrical connection for) gas combination block 230 RAC
- (Electrical connection of) fan
- The majority of components in the control unit
- Ignition transformer
- Power supply cable connection
- Various connections in the connection box

The boiler has a three-wire mains lead (lead length 1.5 m) and is suitable for a 230 VAC/50 Hz power supply with a phase/neutral/earth system. The boiler is not phase sensitive. The boiler is completely pre-wired.

Caution

- Always order a replacement mains lead from Remeha. The power supply cable should only be replaced by Remeha, or by an installer certified by Remeha.
- The switch must be easily accessible
- Use an isolating transformer for connection values other than those stated above.

The control panel and the connection box still need to be fitted. The PCBs are also placed in the connection box.

6.6.3 Assembly of the control panel

Fig.23 Control panel

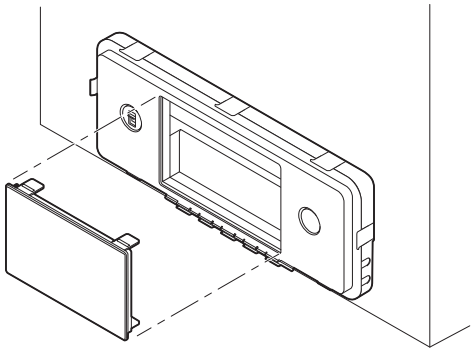

AD-0000628-02

The Quinta Ace boiler is supplied with a separate control panel. The control panel is mounted in the boiler. The cable in the box with connector **X021** must be slid onto the connector pin (5 pins, 24 V) of the PCB.

Fig.24 PCB

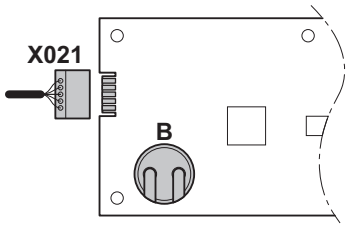

AD-0001300-01

B Battery

There is also a back-up battery on the PCB for the internal clock. Check the battery voltage if the date and time are not displayed clearly.

Fig.25 Opening the connection box

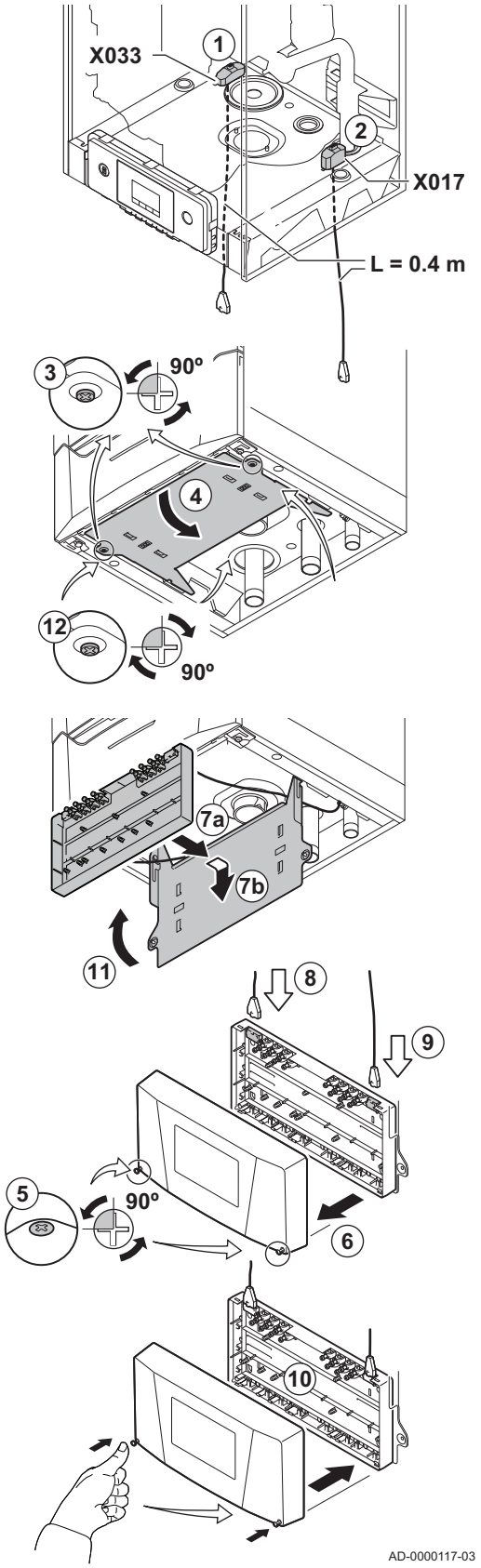

6.6.4 Connecting the connection box

The connection box is included with the delivery of the boiler as standard. Use the connection cables supplied to connect the connection box to the control unit. Proceed as follows:

1. Connect the supplied connection cable **X033** to the connector underneath the boiler.
2. Connect the supplied connection cable **X017** to the connector underneath the boiler.
3. Loosen the 2 screws of the connection box holder underneath the boiler by a quarter of a turn.
4. Push the holder slightly back and fold it down.
5. Loosen the 2 screws in the connection box by a quarter of a turn.
6. Open the cover of the connection box.
7. Slide and click the connection box into position on the connection box holder.
8. Connect the connection cable **X033** with the connector in the connection box.
9. Connect the connection cable **X017** with the connector in the connection box.
10. Now connect the desired external controllers to the other connectors. Proceed as follows:
    - 10.1. Lay the cable under the strain relief clip.
    - 10.2. Press the strain relief clip firmly in place.
    - 10.3. Close the connection box.
    - 10.4. Press the 2 screws in the connection box.
11. Lift the holder up and slide it forward into position.
12. Tighten the 2 screws of the connection box holder underneath the boiler by a quarter of a turn.

Important
The connection box can also be mounted on the wall. Use the screw holes on the back of the connection box. The supplied connection cables must not be extended. Special extension cables are available as an accessory.

6.6.5 Connection possibilities for the standard PCB (CB-01)

Fig.26 Standard PCB (CB-01)

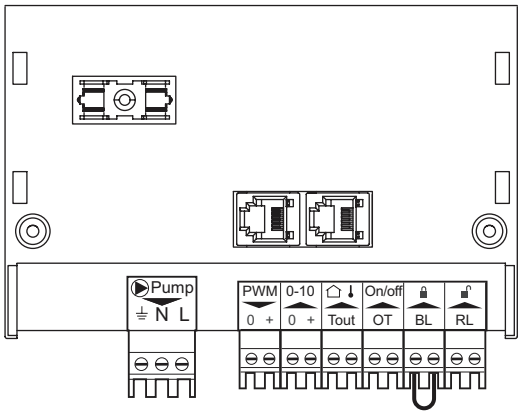

Standard PCB **CB-01** can be found in the connection box. Various thermostats and regulators can be connected to the standard PCB.

■ Connecting the system pump

Fig.27 System pump

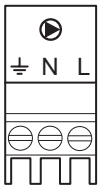

1. Connect a system pump to the **Pump** terminals of the connector.

Important
The maximum power consumption is 300 VA.

The function of the system pump can be changed using parameters **PP015, PP016** and **PP018**.

For more information, see
Parameters - FSB-WHB-HE-150-300, page 50
Changing the parameters, page 49

■ Connecting a PWM system pump

Fig.28 PWM system pump

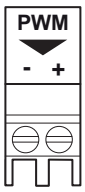

A PWM system pump can be connected to the boiler and can be controlled in a modulating way from the boiler

1. Connect the PWM pump to the **PWM** terminals of the connector.

Important
Contact us for more information.

■ Connecting an outdoor sensor

Fig.29 Outdoor sensor

An outdoor sensor can be connected to the **Tout** terminals of the connector. In the case of an on/off thermostat, the boiler will control the temperature with the set point from the internal heating curve.

1. Connect the two-wire cable to the **Tout** terminals of the connector.

Important
OpenTherm regulators can also use this outdoor sensor. In such cases, the desired heating curve must be set on the regulator.

For more information, see
Parameters - FSB-WHB-HE-150-300, page 50
Changing the parameters, page 49

Fig.30 Outdoor sensor

AD-3000973-02

■ Frost protection combined with outdoor sensor

The central heating system can also be protected against frost in combination with an outdoor sensor. The radiator valve in the frost-sensitive room must be open.

1. Connect the outdoor sensor to the terminals **Tout** of the connector.

The frost protection works as follows with an outdoor sensor:

- At outside temperatures below -10 °C: the circulation pump switches on.
- At outside temperatures above -10 °C: the circulation pump continues to run and then switches off.

■ Connecting the modulating regulator

Fig.31 Modulating thermostat

AD-3001310-01

OT OpenTherm thermostat

The boiler is fitted with an **OpenTherm** connection as standard. As a result, modulating **OpenTherm** thermostats (room-temperature, weather-compensated and cascade thermostats) can be connected without further modifications. The boiler is also suitable for OpenTherm Smart Power.

1. In the case of a room thermostat: install the thermostat in a reference room.
2. Connect the two-wire cable to the **On/Off OT** terminals of the connector. It does not matter which wire is connected to which cable clamp.

■ Analogue input

Fig.32 Analogue input

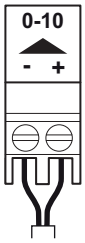

AD-3001304-01

This input has two modes: control based on temperature or based on heat output. If this input is used, the OT communication from the boiler is ignored.

1. Connect the input signal to terminals **0–10** of the connector.

Change the mode of the analogue input using the parameter **EP014**.

For more information, see
Parameters - FSB-WHB-HE-150-300, page 50
Changing the parameters, page 49

– Analogue temperature regulation (°C)

Fig.33 Temperature regulation

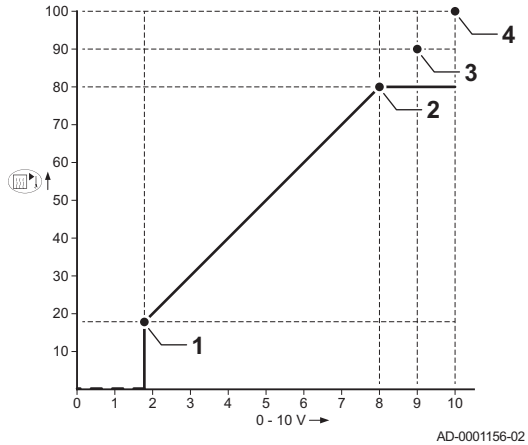

AD-0001156-02

1 Boiler on
2 Parameter **CP010**
3 Maximum flow temperature
4 Calculated value

The 0–10 V signal controls the boiler supply temperature. This control modulates on the basis of flow temperature. The output varies between the minimum and maximum value on the basis of the flow temperature set point calculated by the controller.

Tab.23 Temperature regulation

Input signal (V)	Temperature °C	Description
0–1.5	0–15	Boiler off
1.5–1.8	15–18	Hysteresis
1.8–10	18–100	Desired temperature

– Analogue output-based control

The 0 - 10 V signal controls the boiler output. This control modulates on the basis of the heat output. The minimum output is linked to the boiler's modulation depth. The output varies between the minimum and maximum value on the basis of the value defined by the controller.

Tab.24 Control based on heat output

Input signal (V)	Heat output (%)	Description
0–2.0	0	Boiler off
2.0–2.2	0	Heat demand
2.0–10	0–100	Desired heat output

Blocking input

Fig.34 Blocking input

AD-3000972-02

The boiler has a blocking input. This input is installed on the **BL** terminals of the connector.

Change the function of the input using parameter **AP001**.

Warning
Only suitable for potential-free contacts.

Important
First remove the bridge if this input is used.

For more information, see
Parameters - FSB-WHB-HE-150-300, page 50
Changing the parameters, page 49

Release input

Fig.35 Release input

AD-3001303-01

The boiler has a release input. This input relates to the **RL** terminals of the connector.

Change the function of the input using parameter **AP008**.

Warning
Only suitable for potential-free contacts.

For more information, see
Parameters - FSB-WHB-HE-150-300, page 50
Changing the parameters, page 49

6.7 Connecting a PC/laptop

Fig.36 Connecting an interface connector

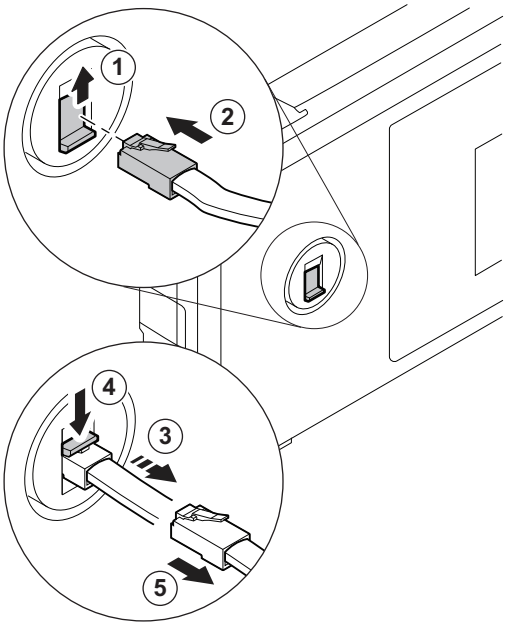

AD-0000311-01

There is a **Service** connector next to the control panel. A Recom interface can be used here to connect a:

- PC
- Laptop
- Smart Service Tool

Using the Recom service software, you can enter, change and read out various boiler settings.

Connecting and disconnecting an interface connector:

1. Move the Service connector slide upwards.
2. Push the interface connector into place. It should snap shut with a click.
   ⇨ The interface connector is connected.
3. Maintain slight tension on the interface connector
4. Push the slide downwards. The interface connector will now be released.
5. Pull the interface connector from the connector.
   ⇨ The interface connector is disconnected.

6.8 Filling the installation

6.8.1 Water quality and water treatment

In many cases, the boiler and central heating system can be filled with normal tap water and water treatment will not be necessary.

The quality of the CH water must comply with certain limit values, which can be found in the **Water quality instructions**. The guidelines in these instructions must be followed at all times.

6.8.2 Filling the siphon

The siphon is supplied separately with the boiler as standard (including a flexible plastic drain hose and a transparent extension hose for the automatic air vent). Fit the siphon under the boiler.

Fig.37 Filling the siphon

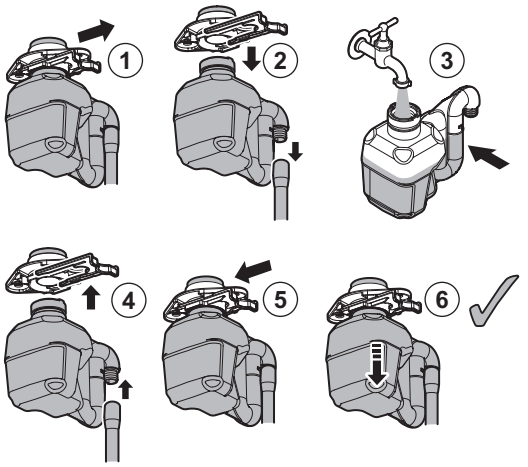

AD-0000231-03

1. Pull the retainer clip of the siphon backwards.
2. Carefully pull the siphon downwards.
3. Fill the siphon with water up to the mark.
4. Push the siphon firmly into the appropriate opening underneath the boiler.
5. Push the retainer clip of the siphon forwards.
6. Check whether the siphon is firmly fitted in the boiler.

Danger
The siphon must always be sufficiently filled with water. This prevents flue gases from entering the room.

6.8.3 Filling the system

Important
In order to be able to read off the water pressure from the control panel, the boiler must be switched on. If the water pressure is too low, the boiler or the boiler pump will not start.

1. Fill the central heating system with clean tap water.

Important
The recommended water pressure is between 1.5 and 2 bar.

2. Check the water-side connections for tightness.

7 Commissioning

7.1 General

Follow the steps set out in the paragraphs below to put the boiler into operation.

Warning
Do not put the boiler into operation if the supplied gas is not in accordance with the approved gas types.

7.2 Gas circuit

Fig.38 Gas measuring point

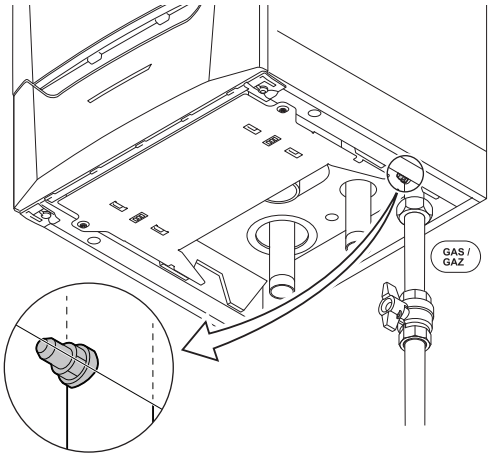

AD-0000121-01

Warning
Ensure that the boiler is disconnected from the power supply.

1. Open the main gas tap.
2. Open the gas tap under the boiler.
3. Check the gas inlet pressure at the measuring point on the gas pipe.

Warning
For authorized gas pressures, see: Unit categories, page 13

4. Vent the gas supply pipe by unscrewing the measuring point.
5. Tighten the measuring point again when the pipe has been fully vented.
6. Check all connections for gas tightness. The test pressure may be a maximum of 60 mbar.

7.3 Hydraulic circuit

1. Check the siphon; it should be fully filled with clean water.
2. Check the water-side connections for tightness.

7.4 Electrical connections

1. Check the electrical connections.

7.5 Commissioning procedure

Warning
- Initial commissioning must be done by a qualified installer.
- If adapting to another type of gas, e.g. propane, the boiler must be adjusted before it is switched it on.

See
Adjusting to a different gas type, page 42

1. Open the main gas tap.
2. Open the boiler gas tap.
3. Switch the power on with the boiler's on/off switch.
   ⇨ The start-up program will start and cannot be interrupted. During the program, all segments of the display are shown briefly.
4. At the end of the start-up program, the display will show: **LG:FR** (**FR** flashes in the picture)

Fig.39 Step 4

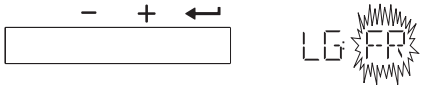

AD-4100151-01

Fig.40 Step 5

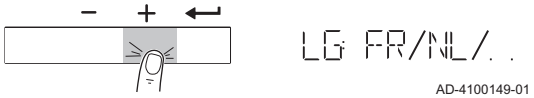

5. With the key + select the desired language.

Fig.41 Step 6

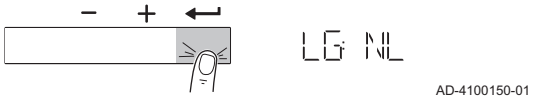

6. Press the ⟵ key to confirm the selection.
   ⇨ **RESET ALL** will be displayed.

Fig.42 Step 7

7. To confirm, press the ⟵ key.
8. The selected language is now set-up and the main display will appear.
9. Set the components (thermostats, control) so that heat is demanded.

Important
In the event of an error during the start-up, a message with the corresponding code is displayed. The meaning of the error codes can be found in the error table.

For more information, see
Error codes, page 68

7.6 Gas settings

7.6.1 Adjusting to a different gas type

Warning
Only a qualified engineer may carry out the following operations.

The factory setting of the boiler is for operation with the natural gas group G20 (H gas).

Tab.25 Factory settings G20 (H-gas)

Code	Description	Range	160
DP003	Maximum fan speed on Domestic Hot Water	1000 Rpm - 7000 Rpm	6700
GP007	Maximum fan speed during Central Heating mode	1000 Rpm - 8500 Rpm	6700
GP008	Minimum fan speed during Central Heating + Domestic Hot Water mode	900 Rpm - 8500 Rpm	1900
GP009	Fan speed at appliance start	900 Rpm - 5000 Rpm	2200

Before operating with a different type of gas, carry out the following steps:

Fig.43 Installing gas diaphragm

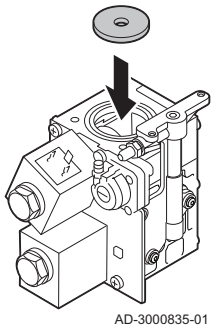

1. Fit the gas diaphragm in the gas block. If the boiler is modified, for G30/G31 (butane/propane) :
   Tab.26 Gas diaphragm for G30/G31 (butane/propane)

Gas diaphragm for G30/G31 (butane/propane)	Ø (mm)
Quinta Ace 160	9.0

2. Adjust the fan speed (if necessary) for the gas type used according to the table below. The setting can be changed with a parameter setting: .

Tab.27 Adjustment for gas type G30/G31 (butane/propane)

Code	Description	Range	160
DP003	Maximum fan speed on Domestic Hot Water	1000 Rpm - 7000 Rpm	6400
GP007	Maximum fan speed during Central Heating mode	1000 Rpm - 8500 Rpm	6400
GP008	Minimum fan speed during Central Heating + Domestic Hot Water mode	900 Rpm - 8500 Rpm	2150
GP009	Fan speed at appliance start	900 Rpm - 5000 Rpm	3000

3. Check the setting of the gas/air ratio.

See
Checking/setting combustion, page 43

7.6.2 Checking/setting combustion

Fig.44 Flue gas measuring point

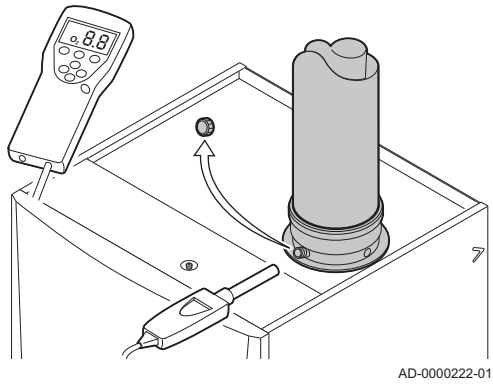

1. Unscrew the cap from the flue gas measuring point.
2. Insert the probe for the flue gas analyser into the measurement opening.

Warning
During measurement, seal the opening around the sensor fully.

Important
The flue gas analyser must have a minimum accuracy of ±0.25% O_2/CO_2.

Important
The flue gas analyser must meet the requirements of BS 7927 or BS-EN 503793 and be calibrated according to the manufacturer's requirements.

3. Measure the percentage of O_2/CO_2 in the flue gases. Take measurements at full load and at part load.

Important
Measurements must be taken with the front casing off.

■ Enable full load

Fig.45 Step 1

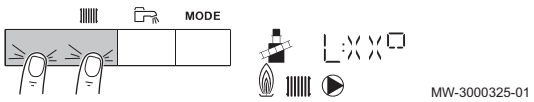

1. Press the two keys on the left simultaneously to select chimney sweep mode.
   ⇨ The device is now running at part load. Wait until **L:XX°** appears on the display.

Fig.46 Step 2

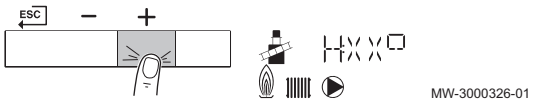

2. Press the + key twice.
   ⇨ The device is now running at full load. Wait until **H:XX°** appears on the display.

■ Checking/setting values for O_2/CO_2 at full load

1. Measure the percentage of O_2/CO_2 in the flue gases at full load.
2. Compare the measured value with the checking values in the table.

Tab.28 Checking/setting values for O_2/CO_2 at full load for G20 (H gas)

Values at full load for G20 (H gas)	O_2 (%)	CO_2 (%)
Quinta Ace 160	4.8 - 5.2(1)	8.8(1) - 9.0
(1) Nominal value		

Tab.29 Checking/setting values for O_2/CO_2 at full load for G30/G31 (butane/propane)

Values at full load for G30/G31 (butane/propane)	O_2 (%)	CO_2 (%)
Quinta Ace 160	5.1 - 5.4(1)	10.2(1) - 10.4
(1) Nominal value		

Caution
- The O_2 values at full load must be lower than the O_2 values at low load.
- The CO_2 values at full load must be higher than the CO_2 values at low load.

3. If the measured value is outside of the values given in the table, correct the gas/air ratio.
4. Using the adjusting screw **A**, set the percentage of O_2/CO_2 for the gas type being used to the nominal value. This should always be inside the highest and lowest setting limit.

Fig.47 Position of adjusting screw A

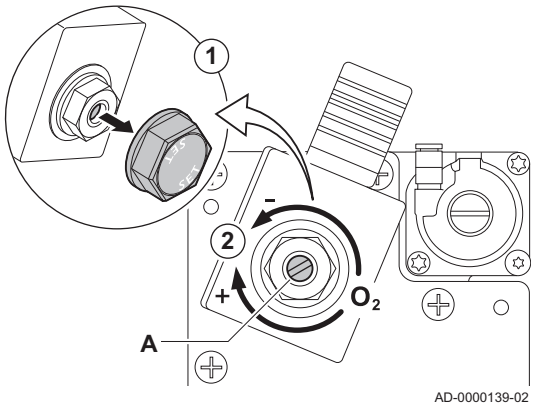

Enable part load

Fig.48 Step 1

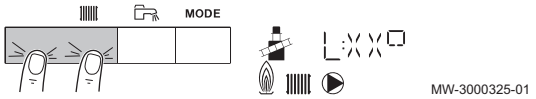

1. Press the two keys on the left simultaneously to select chimney sweep mode.
   ⇨ The device is now running at part load. Wait until **L:XX°** appears on the display.
2. Press the ESC key to go back to the main display.

Checking/setting values for O_2/CO_2 at part load

1. Measure the percentage of O_2/CO_2 in the flue gases at part load.
2. Compare the measured value with the checking values in the table.

Tab.30 Checking/setting values for O_2/CO_2 at part load for G20 (H gas)

Values at part load for G20 (H gas)	O_2 (%)	CO_2 (%)
Quinta Ace 160	5.2(1) - 5.6	8.6 - 8.8(1)
(1) Nominal value		

Tab.31 Checking/setting values for O_2/CO_2 at part load for G30/G31 (butane/propane)

Values at part load for G30/G31 (butane/propane)	O_2 (%)	CO_2 (%)
Quinta Ace 160	5.4(1) - 5.7	10.0 - 10.2(1)
(1) Nominal value		

Caution
- The O_2 values at part load must be higher than the O_2 values at full load.
- The CO_2 values at part load must be lower than the CO_2 values at full load.

3. If the measured value is outside of the values given in the table, correct the gas/air ratio.
4. Using the adjusting screw **B**, set the percentage of O_2/CO_2 for the gas type being used to the nominal value. This should always be within the maximum and the minimum setting limits.

Fig.49 Position of adjusting screw B

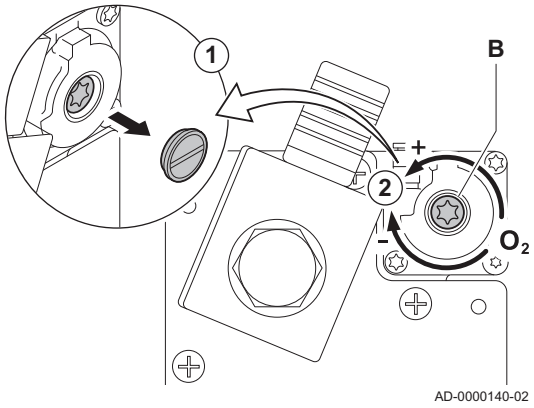

7.7 Final instructions

1. Remove the measuring equipment.
2. Screw the cap on to the flue gas measuring point.
3. Seal the gas valve unit.
4. Put the front casing back.
5. Heat the central heating system up to approximately 70°C.
6. Switch the boiler off.
7. Vent the central heating system after approx. 10 minutes.
8. Turn on the boiler.
9. Check the water pressure. If necessary, top up the central heating system.
10. Fill in the following data on the sticker included, and attach it next to the data plate on the appliance.
    - If adapted to another gas, fill in the gas type;
    - The gas supply pressure;
    - If set to overpressure application, fill in the type;
    - The parameters modified for the changes mentioned above.
11. Instruct the user in the operation of the system, boiler and controller.
12. Inform the user of the maintenance to be performed.
13. Hand over all manuals to the user.
14. Confirm the commissioning with a signature and a company stamp.
    ⇨ The boiler is now ready for operation.

Fig.50 Example filled-in sticker

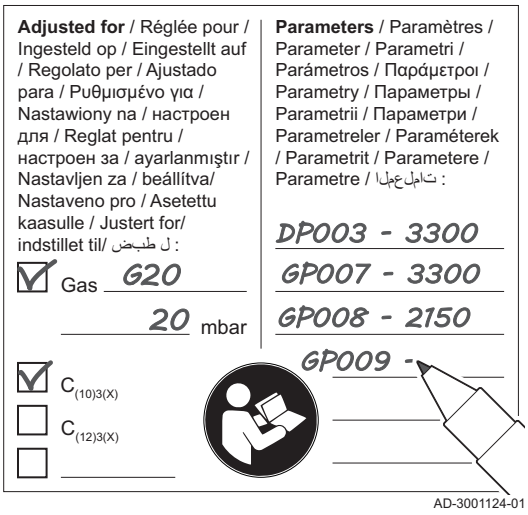

8 Operation

8.1 Use of the control panel

8.1.1 Meaning of the symbols on the display

Tab.32 Possible symbols in the display (depending on available devices or functions)

	Chimney sweep mode is enabled (forced full load or part load for O_2/CO_2 measurement).
	Information menu: read out various current values.
	User menu: user-level parameters can be configured.
	Installer menu: installer level parameter can be configured.
	Manual mode menu: manual mode can be configured.
	Error menu: errors can be read out.
	Hour counter/timer program/time display menu.
	Control PCB menu: (optional) control PCBs can be read out.
	The outside temperature sensor is connected.
	The room temperature sensor is connected.
	The burner output level (1 to 5 bars, with each bar representing 20% output)
	The heat pump is switched on.
1 - 7	Day display
	Central heating operation is switched off.
	DHW operation is switched off.
	The solar boiler is on and its heat level is displayed.
bar	System water pressure display.
	The holiday program is enabled.
	Frost protection operation is enabled.
	CH operation is enabled.
	DHW operation is enabled.
	Displaying the selected PCB.
	The three-way valve is switched on.
	The circulation pump is turning.
ECO	ECO mode operation is enabled.
	Switch the appliance off then on again.

8.1.2 Browsing in the menus

Important

- Depending on the devices or control PCBs connected, the control panel shows selection options in some menus.
- First, select a device, control PCB or zone to view or amend a setting.

1. Press any key to activate the controller from the stand-by screen.

Fig.51 Step 1

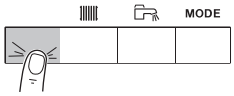

MW-3000377-02

Fig.52 Step 2

2. Access the available menu options by pressing the two keys on the right simultaneously.

Tab.33 Possible menu choices

	Information Menu
	User menu
	Installer Menu
	Manual mode menu
	Failure Menu
	Hour Run Meters / Timer Program / Clock menu
	PCB menu(1)

(1) The icon is displayed only if an optional control PCB has been installed.

Fig.53 Step 3

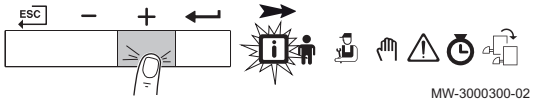

3. Press the + key to move the cursor to the right.

Fig.54 Step 4

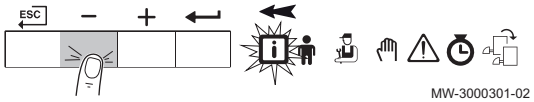

4. Press the − key to move the cursor to the left.

Fig.55 Step 5

5. Press the ↵ key to confirm selection of the required menu or parameter.

Fig.56 Step 6

6. Press the + or − key to modify the value.

Fig.57 Step 7

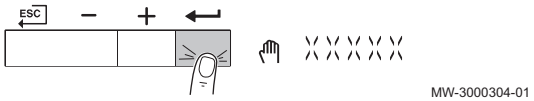

7. Press the ↵ key to confirm the value.

Fig.58 Step 8

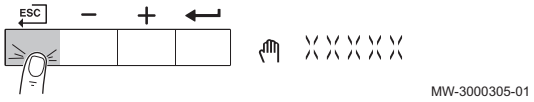

8. Press the ESC key to go back to the main display.

Important
The screen will return to stand-by if no key is pressed for three minutes.

8.2 Shutdown

If the central heating is not due to be used for a long period of time, it is recommended that the boiler be disconnected from the power supply.

1. Turn off the boiler using the on/off switch.
2. Shut off the gas supply.
3. Keep the area frost-free.

8.3 Frost protection

Caution

- Drain the boiler and central heating system if you are not going to use your home or the building for a long time and there is a chance of frost.
- The frost protection does not work if the boiler is out of operation.
- The built-in boiler protection is only activated for the boiler and not for the system and radiators.
- Open the valves of all the radiators connected to the system.

Set the temperature control low, for example to 10°C.

If there is no heat demand, the boiler will only switch on to protect itself against frost.

If the temperature of the central heating water in the boiler drops too low, the built-in boiler protection system is activated. This system works as follows:

- At a water temperature lower than 7°C, the heating pump starts.
- If the water temperature is lower than 4°C, the boiler switches on.
- If the water temperature is higher than 10°C the boiler switches off and the circulation pump continues to run for a short time.

To prevent the system and radiators freezing in frost-sensitive areas (e.g. a garage), a frost thermostat or outside sensor can be connected to the boiler.

9 Settings

9.1 Changing the parameters

The boiler's control unit is set for the most common central heating systems. These settings will ensure that virtually every central heating system operates effectively. The user or the installer can optimise the parameters as required.

Caution
Changing the factory settings may adversely affect the operation of the boiler.

9.1.1 Configuring the installation parameters

Fig.59 Step 2

1. Navigate to the Installer menu.
2. Press the ↵ key to open the menu.

Fig.60 Step 3

3. Keep pressing the + key until the code **0012** is displayed.

Fig.61 Step 4

4. Press the ↵ key to confirm opening the menu.

Fig.62 Step 5

5. Keep pressing the + key until the required device, control PCB or zone is displayed.

Fig.63 Step 6

6. Press the ↵ key to confirm the selection.

Fig.64 Step 7

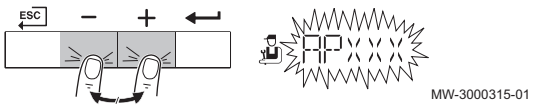

7. Keep pressing the + or − key until the required parameter is displayed.

Fig.65 Step 8

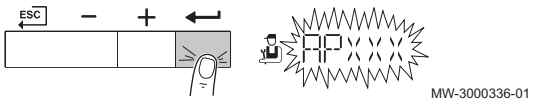

8. Press the ↵ key to confirm the selection.

Fig.66 Step 9

9. Press the + or − key to modify the value.

Fig.67 Step 10

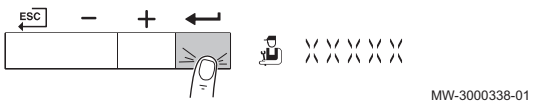

10. Press the ↵ key to confirm the value.

Fig.68 Step 11

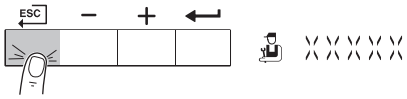

11. Press the ESC key multiple times to go back to the main display.

9.2 List of parameters

The code of the parameters always contain two letters and three numbers. The letters stand for:

AP Appliance related parameters
CP Zone related parameters
DP Domestic hot water related parameters
EP Smart Solutions related parameters
GP Gas-fired heat engine related parameters
PP Central heating related parameters

Important
All possible options are indicated in the adjustment range. The display of the boiler only shows the relevant settings for the appliance.

For more information, see
Changing the parameters, page 49

9.2.1 Parameters - FSB-WHB-HE-150-300

Important

- All tables show the factory setting for the parameters.
- The tables also list parameters that are only applicable if the boiler is combined with other equipment such as an outdoor sensor.
- All possible options are indicated in the adjustment range. The display of the boiler only shows the relevant settings for the appliance.

Tab.34 > FSB-WHB-HE-150-300 - Factory settings at user level

Code	Description	Range	160
AP016	Enable central heating heat demand processing	0 = Off 1 = On	1
AP017	Enable domestic hot water heat demand processing	0 = Off 1 = On	1
CP080	Room setpoint temperature of the user zone activity	5 °C - 30 °C	16
CP081	Room setpoint temperature of the user zone activity	5 °C - 30 °C	20
CP082	Room setpoint temperature of the user zone activity	5 °C - 30 °C	6
CP083	Room setpoint temperature of the user zone activity	5 °C - 30 °C	21
CP084	Room setpoint temperature of the user zone activity	5 °C - 30 °C	22
CP085	Room setpoint temperature of the user zone activity	5 °C - 30 °C	20
CP200	Manually setting the room temperature setpoint of the zone	5 °C - 30 °C	20
CP320	Operating mode of the zone	0 = Scheduling 1 = Manual 2 = Antifrost 3 = Temporary	1
CP510	Temporary room setpoint per zone	5 °C - 50 °C	20
CP550	Fire Place mode is active	0 = Off 1 = On	0

Code	Description	Range	160
CP570	Time Program of the zone selected by the user	0 = Schedule 1 1 = Schedule 2 2 = Schedule 3 3 = Cooling	0
CP660	Choice icon to display this zone	0 = None 1 = All 2 = Bedroom 3 = Livingroom 4 = Study 5 = Outdoor 6 = Kitchen 7 = Basement 8 = Swimming Pool 9 = DHW Tank 10 = DHW Electrical Tank 11 = DHW Layered Tank 12 = Internal Boiler Tank 13 = Time Program	1
CP670	Configuration of pairing room unit per zone		-

Tab.35 > FSB-WHB-HE-150-300 - Factory settings at installer level

Code	Description	Range	160
AP001	Blocking input setting (1: Full blocking, 2: Partial blocking, 3: User reset locking)	1 = Full blocking 2 = Partial blocking 3 = User reset locking 4 = Backup Relieved 5 = Heat Pump Relieved 6 = HP & backup relieved 7 = High, Low Tariff 8 = Photovoltaic HP Only 9 = PV HP And backup 10 = Smart Grid ready 11 = Heating Cooling	1
AP006	Appliance will report low water pressure below this value	0 bar - 6 bar	0,7
AP008	The appliance will wait x sec (0=off) for the release contact to close in order to start the burner	0 Sec - 255 Sec	0
AP009	Burning hours before raising a service notification	100 Hours - 25500 Hours	17400
AP010	The type of service needed based on burn and powered hours	0 = None 1 = Custom notification 2 = ABC notification	2
AP011	Hours powered to raise a service notification	100 Hours - 25500 Hours	17400
AP056	Enable outdoor sensor	0 = No outside sensor 1 = AF60 2 = QAC34	1
AP073	Outdoor temperature: upper limit for heating	1.5 °C - 60 °C	22
AP074	The heating is stopped. Hot water is maintained. Force Summer Mode	0 = Off 1 = On	0
AP079	Inertia of the building used for heat up speed	0 - 255	0
AP080	Outside temperature below which the antifreeze protection is activated	-32 °C - 10 °C	0
AP110	Parameter to activate the 2nd return sensor	0 = Inactive 1 = Active	0
CP000	Maximum Flow Temperature setpoint zone	0 °C - 90 °C	90
CP010	Zone flow temperature setpoint, used when the zone is set to a fixed flow setpoint.	0 °C - 90 °C	90

Code	Description	Range	160
CP020	Functionality of the zone	0 = Disable 1 = Direct 2 = Mixing Circuit 3 = Swimming pool 4 = High Temperature 5 = Fan Convector 6 = DHW tank 7 = Electrical DHW 8 = Time Program 9 = ProcessHeat 10 = DHW Layered 11 = DHW Internal tank 12 = DHW Commercial Tank 31 = DHW FWS EXT	1
CP040	Pump post runtime of the zone	0 Min - 20 Min	0
CP060	Wished room zone temperature on holiday period	5 °C - 20 °C	6
CP070	Max Room Temperature limit of the circuit in reduced mode, that allows switching to comfort mode	5 °C - 30 °C	15
CP210	Comfort footpoint of the temperature of heat curve of the circuit	15 °C - 90 °C	15
CP220	Reduced footpoint of the temperature of heat curve of the circuit	15 °C - 90 °C	15
CP230	Heating curve temperature gradient of the zone	0 - 4	2,5
CP240	Adjustment of the influence of the zone room unit	0 - 10	3
CP250	Calibration of Zone Room Unit	-5 °C - 5 °C	0
CP340	Type of reduced night mode, stop or maintain heating of circuit	0 = Stop heat demand 1 = Continue heat demand	0
CP470	Setting of the screed drying program of the zone	0 Days - 30 Days	0
CP480	Setting of the start temperature of the screed drying program of the zone	20 °C - 50 °C	20
CP490	Setting of the stop temperature of the screed drying program of the zone	20 °C - 50 °C	20
CP730	Selection of heat up speed of the zone	0 = Extra Slow 1 = Slowest 2 = Slower 3 = Normal 4 = Faster 5 = Fastest	0
CP740	Selection of cool down speed of the zone	0 = Slowest 1 = Slower 2 = Normal 3 = Faster 4 = Fastest	0
CP750	Maximum zone preheat time	0 Min - 65000 Min	0
CP780	Selection of the control strategy for the zone	0 = Automatic 1 = Room Temp based 2 = Outdoor Temp based 3 = Outdoor&Room based	1
DP003	Maximum fan speed on Domestic Hot Water	1000 Rpm - 7000 Rpm	6700
EP014	Smart Control Board function 10 Volt PWM input	0 = Off 1 = Temperature control 2 = Power control	0
GP007	Maximum fan speed during Central Heating mode	1000 Rpm - 8500 Rpm	6700
GP008	Minimum fan speed during Central Heating + Domestic Hot Water mode	900 Rpm - 8500 Rpm	1900
GP009	Fan speed at appliance start	900 Rpm - 5000 Rpm	2200
GP010	Gas Pressure Switch check on/off	0 = No 1 = Yes	0

Code	Description	Range	160
GP021	Modulate back when delta temperature is large then this treshold	5 °C - 25 °C	25
GP024	Valve Proofing System check on / off	0 = No 1 = Yes	0
PP015	Central heating pump post run time	1 Min - 99 Min	1
PP016	Maximum central heating pump speed (%)	20 % - 100 %	100
PP018	Minimum central heating pump speed (%)	20 % - 100 %	20
PP023	Hysteresis to start burner in heating mode	1 °C - 25 °C	10

9.3 Reading out measured values

9.3.1 Reading out counters

You can read out the counters of the appliance and the connected control boards, sensors and so on.

1. Navigate to the Counter menu.
2. Press the ↵ key to open the menu.

Fig.69 Step 2

3. Press the ↵ key to confirm the selection.
   ⇨ The text **CODE** flashes in the display.

Fig.70 Step 3

4. Press the ↵ key to confirm the selection.

Fig.71 Step 4

5. Keep pressing the + key until the code **0012** is displayed.

Fig.72 Step 5

6. Keep pressing the + key until the required value is displayed.

Fig.73 Step 6

7. Press the ESC key multiple times to go back to the main display.

Fig.74 Step 7

9.3.2 Reading out signals and software versions

You can read out the signals and software versions of the appliance and the connected control boards, sensors and so on.

1. Navigate to the Information menu.
2. Press the ↵ key to open the menu.

Fig.75 Step 2

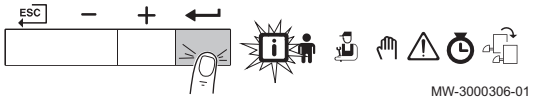

Fig.76 Step 3

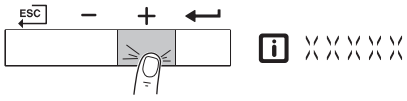

3. Keep pressing the + key until the required device, control PCB or zone is displayed.

Fig.77 Step 4

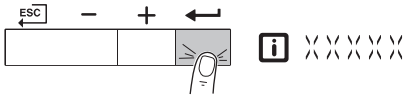

4. Press the ⟵ key to confirm the selection.

Fig.78 Step 5

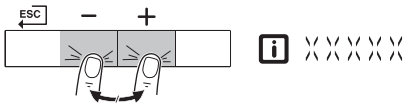

5. Keep pressing the + or − key until the required value is displayed. At the end of the cycle, the software version and parameter version of the selected appliance or control PCB are displayed.

Fig.79 Step 6

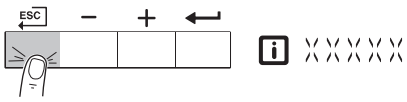

6. Press the ESC key multiple times to go back to the main display.

9.3.3 Status and Sub-status

The information menu ⓘ gives the Status and Sub-status numbers.

9.4 List of measured values

For more information, see
Reading out measured values, page 53

9.4.1 Counters - FSB-WHB-HE-150-300

Tab.36 ⏱ > FSB-WHB-HE-150-300 - Counters at user level

Code	Description	Range
AC001	Number of hours that the appliance has been on mains power	0 Hours - 65534 Hours
DC002	Numbers of Domestic Hot Water diverting valve cycles	0 - 4294967295
DC003	Number of hours during which the diverting valve is in DHW position	0 Hours - 4294967295 Hours
DC004	Number of burner starts for Domestic Hot Water	0 - 4294967295
DC005	Number of burning hours in Domestic Hot Water	0 Hours - 4294967295 Hours
PC003	Total number of burning hours. For heating and domestic hot water	0 Hours - 65534 Hours

Tab.37 ⏱ > FSB-WHB-HE-150-300 - Counters at installer level

Code	Description	Range
DC001	Total power consumption used by Domestic Hot Water	0 kW - 4294967295 kW
PC002	Total number of burner starts. For heating and domestic hot water	0 - 65534
PC004	Number of burner flame loss	0 - 65534

9.4.2 Signals - FSB-WHB-HE-150-300

Tab.38 ⓘ > FSB-WHB-HE-150-300 - Signals at user level

Code	Description	Range
AM001	Is the appliance currently in domestic hot water production mode?	0 = Off 1 = On
AM010	The current pump speed	0 % - 100 %
AM012	Current main status of the appliance.	DeviceState

Code	Description	Range
AM014	Current sub status of the appliance.	DeviceSubStatus
AM015	Is the pump running?	0 = Inactive 1 = Active
AM016	Flow temperature of appliance.	-25 °C - 150 °C
AM017	The temperature of heat exchanger	-25 °C - 150 °C
AM018	Return temperature of appliance. The temperature of the water entering the appliance.	-25 °C - 150 °C
AM019	Water pressure of the primary circuit.	0 bar - 25.5 bar
AM022	On / Off heat demand	0 = Off 1 = On
AM024	Actual relative power of the appliance	0 % - 655.35 %
AM027	Instantaneous outside temperature	-60 °C - 60 °C
AM028	Value of the 0 to 10 Volt input. Meaning is dependant on the current input function setting.	0 V - 25 V
AM037	Status of the three way valve	0 = CH 1 = DHW
AM040	Temperature used for hot water control algorithms.	-25 °C - 150 °C
AM101	Internal system flow temperature setpoint	0 °C - 120 °C
AP078	Outside sensor detected in the application	0 = No 1 = Yes
GM001	Actual fan RPM	0 Rpm - 8500 Rpm
GM002	Actual fan RPM setpoint	0 Rpm - 8500 Rpm
GM006	Gas Pressure Switch status	0 = Open 1 = Closed 2 = Off
GM008	Actual flame current measured	0 µA - 25 µA
GM012	Release signal for the CU	0 = No 1 = Yes
GM015	Valve Proving System switch open / closed	0 = Open 1 = Closed 2 = Off

Tab.39 ⓘ > FSB-WHB-HE-150-300 - Signals at installer level

Code	Description	Range
AM011	Is service currently required?	0 = No 1 = Yes
AM033	Next service indication	0 = None 1 = A 2 = B 3 = C 4 = Custom
AM036	Temperature of the exhaust gas leaving the appliance	0 °C - 250 °C
AM044	Number of sensors supported by the device	0 - 255
AM045	Water pressure sensor present?	0 = No 1 = Yes
AM091	Seasonal mode active (summer / winter)	0 = Winter 1 = Frost protection 2 = Summer neutral band 3 = Summer
GM004	Gas valve 1	0 = Open 1 = Closed 2 = Off
GM005	Gas valve 2	0 = Open 1 = Closed 2 = Off
GM010	Available power in % of maximum	0 % - 100 %

Code	Description	Range
GM044	Possible reason for Controlled Stop	0 = None 1 = CH Blocking 2 = DHW Blocking 3 = Wait for burner 4 = TFlow > absolute max 5 = TFlow > start temp. 6 = Theat exch. > Tstart 7 = Avg Tflow > Tstart 8 = TFlow > max setpoint 9 = T difference too big 10 = TFlow > stop temp. 11 = Avg Tflow > Tstop
PM002	External winning Central Heating setpoint	0 °C - 125 °C

9.4.3 Status and sub-status - FSB-WHB-HE-150-300

Tab.40 Status numbers

Status	
0	Standby
1	Heat Demand
2	Burner Start
3	Burning CH
4	Burning Dhw
5	Burner Stop
6	Pump Post Run
7	Cooling Active
8	Controlled Stop
9	Blocking Mode
10	Locking Mode
11	Load test min
12	Load test CH max
13	Load test DHW max
15	Manual Heat Demand
16	Frost Protection
17	DeAiration
18	Control unit Cooling
19	Reset In Progress
20	Auto Filling
21	Halted
200	Device Mode

Tab.41 Sub-status numbers

Sub-status	
0	Standby
1	AntiCycling
2	CloseHydraulicValve
3	ClosePump
4	WaitingForStartCond.
10	CloseExtGasValve
11	StartToGlueGasValve
12	CloseFlueGasValve
13	FanToPrePurge
14	WaitForReleaseSignal

Sub-status	
15	BurnerOnCommandToSu
16	VpsTest
17	PreIgnition
18	Ignition
19	FlameCheck
20	Interpurge
30	Normal Int.Setpoint
31	Limited Int.Setpoint
32	NormalPowerControl
33	GradLevel1PowerCtrl
34	GradLevel2PowerCtrl
35	GradLevel3PowerCtrl
36	ProtectFlamePwrCtrl
37	StabilizationTime
38	ColdStart
39	ChResume
40	SuRemoveBurner
41	FanToPostPurge
42	OpenExt&FlueGasValve
43	StopFanToFlueGVRpm
44	StopFan
45	LimitedPwrOnTflueGas
60	PumpPostRunning
61	OpenPump
62	OpenHydraulicValve
63	SetAntiCycleTimer
200	Initialising Done
201	Initialising Csu
202	Init. Identifiers
203	Init.BL.Parameter
204	Init. Safety Unit
205	Init. Blocking

10 Maintenance

10.1 General

The boiler does not require a lot of maintenance. Nevertheless, the boiler must be inspected and maintained periodically. To determine the best time for servicing, the boiler is equipped with an automatic service message. The control unit determines when this service message appears.

Caution

- Maintenance operations must be completed by a qualified installer.
- During inspection or maintenance work, always replace all gaskets of the disassembled parts.
- We recommend taking out a maintenance contract.
- Replace defective or worn parts with original spare parts.
- An annual inspection is mandatory.

10.2 Maintenance message

The boiler display will clearly indicate that a service is required at the appropriate time.

See
Manual for the control panel

Use the automatic service message for preventive maintenance, to keep faults to a minimum. The service messages show which service kit must be used. These service kits contain all parts and gaskets that are required for the relevant service. These service kits (A, B or C), put together by Remeha , are available from your spare parts supplier.

Important

- A service message must be followed up within 2 months. Therefore, call your installer as soon as possible.
- If the iSense modulating controller is connected to the boiler, this maintenance message can also be forwarded to the iSense. Consult the manual for the regulator.

Caution
Reset the maintenance message following every service.

10.2.1 Resetting the service messages

A service message on the boiler display must be reset by a qualified installer within two months after the indicated maintenance service has been carried out using the relevant service set and after this has been entered in the checklist. Proceed as follows:

1. Perform the service with the specified service kit (A, B or C).
2. Note the service in the corresponding checklist.

See
Appendix, page 77

3. Reset the service message.

See
Manual for the control panel

10.2.2 Starting a new service interval

For an interim service it is advisable to read out in the boiler service menu what maintenance service should be carried out. Use the indicated Remeha service kits (A, B or C). This service message must be prevented by carrying out a reset. Start the next service interval. Proceed as follows:

1. In the Service menu of the boiler, read which service should be performed.

See
Manual for the control panel

2. Perform the service with the specified service kit (A, B or C).
3. Note the service in the corresponding checklist.

See
Appendix, page 77

4. Reset the service message.
   ⇨ This prevents this service message from appearing automatically after all.
5. Start the next service interval.

10.3 Standard inspection and maintenance operations

Warning
Always wear safety goggles and a dust mask during cleaning work (involving compressed air).

For a service, always perform the following standard inspection and maintenance operations.

Caution
- Check whether all gaskets have been positioned properly (absolutely flat in the appropriate groove means they are gas tight).
- During the inspection and maintenance operations, water (drops, splashes) must never come into contact with the electrical parts.

10.3.1 Checking the water pressure

1. Check the water pressure.

Important
The water pressure is shown on the display of the control panel.

   ⇨ The water pressure must be at least 0.8 bar
2. If the water pressure is lower than 0.8 bar, top up the central heating system.

10.3.2 Checking the water quality

1. Fill a clean bottle with some water from the system/boiler from the filling and drain cock.
2. Check the quality of this water sample or have it checked.

See
More information is available in our **Water quality instructions**. This manual forms part of the set of documents supplied with the boiler. Always adhere to the instructions in the aforementioned document.

10.3.3 Checking the ionisation current

1. Check the ionisation current at full load and at low load.
   ⇨ The value is stable after 1 minute.
2. Clean or replace the ionisation/ignition electrode if the value is lower than 4 µA.

For more information, see
Replacing the ionisation/ignition electrode, page 65

10.3.4 Checking the flue gas discharge/air supply connections

Fig.80 Checking flue gas discharge/air supply connections

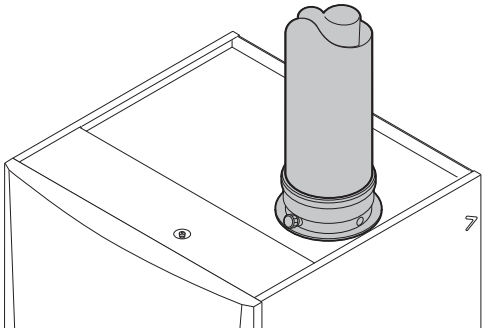

AD-0000223-01

1. Check the flue gas discharge and air supply connections for condition and tightness.

10.3.5 Checking the combustion

Combustion is checked by measuring the O_2/CO_2percentage in the flue gas outlet duct.

For more information, see
Checking/setting combustion, page 43

10.3.6 Checking the PS air pressure differential switch

Checking the air pressure differential switch + side

Fig.81 Check the air pressure differential switch + side

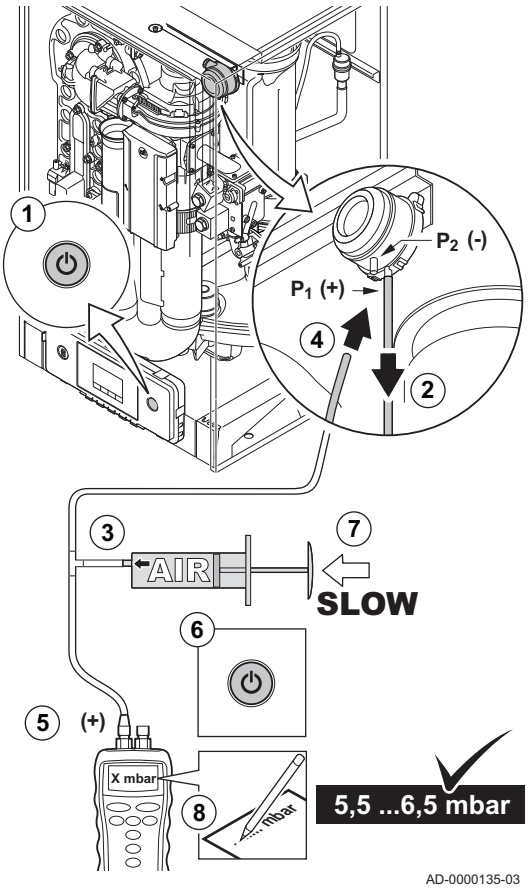

1. Switch off the boiler.
2. Disconnect the silicon hose on the + side (**P1**) of the air pressure differential switch.
3. Take a large plastic syringe or bellows and connect a T piece with a hose connected.
4. Connect the + side of the air pressure differential switch to one end of the T piece with a hose.
5. On the other end of the T piece, connect the + side of a pressure gauge.
6. Turn on the boiler
7. Push the syringe or bellows in very slowly until the boiler goes into failure mode.
8. Make a note of the pressure indicated by the pressure gauge at that point. A switch pressure of between 5.5 and 6.5 mbar is fine. A lower or higher switch pressure indicates a problem with the air pressure differential switch.
9. After taking a measurement, detach the silicon hose from the T piece on the + side and reconnect the hose that was previously removed.

Caution
Please note: The + side (**P1**) is the rear connector nipple of the air pressure differential switch.

10. Remove any soiling from all connection points for hoses and the air pressure differential switch.
11. Check the condition and tightness of the hoses of the air pressure differential switch. Replace the hoses if necessary.

Checking the air pressure differential switch – side

Fig.82 – side of the air pressure differential switch

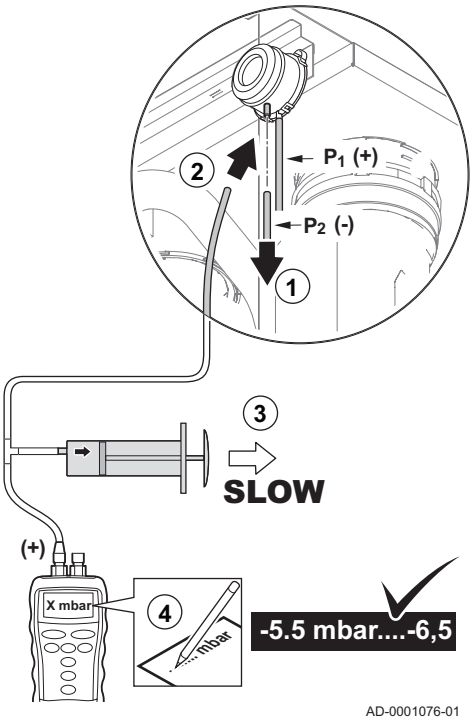

1. Disconnect the short, coloured silicon hose on the – side (**P2**) of the air pressure differential switch.
2. Connect the – side of the air pressure differential switch to one end of the T piece with a hose.
3. Pull out the syringe until the boiler goes into failure mode.
4. Make a note of the pressure indicated by the pressure gauge at that point.
   ⇨ A switch pressure of between - 5.5 and - 6.5 mbar is fine. A lower or higher switch pressure indicates a problem with the air pressure differential switch.
5. After taking a measurement, detach the silicon hose from the T-piece on the – side and reconnect the coloured hose that was previously removed.
6. Remove any soiling from all connection points for hoses and the air pressure differential switch.
7. Check the condition and tightness of the hoses of the air pressure differential switch.
   ⇨ Replace the hoses if necessary.

10.3.7 Checking the automatic air vent

Fig.83 Checking the automatic air vent

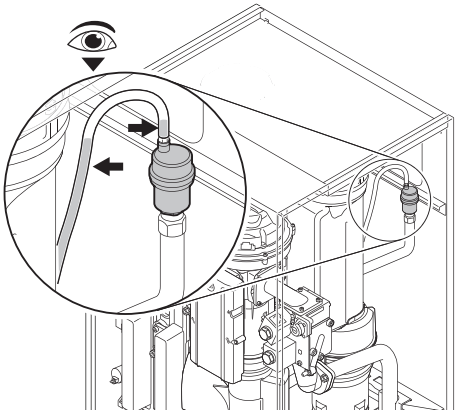

AD-0000127-01

1. Check the hose on top of the air vent.
2. The automatic air vent is leaking if water can be seen in the connected hose.
3. In the event of a leak, replace the air vent.

10.3.8 Checking the burner and cleaning the heat exchanger

Fig.84 Checking the burner

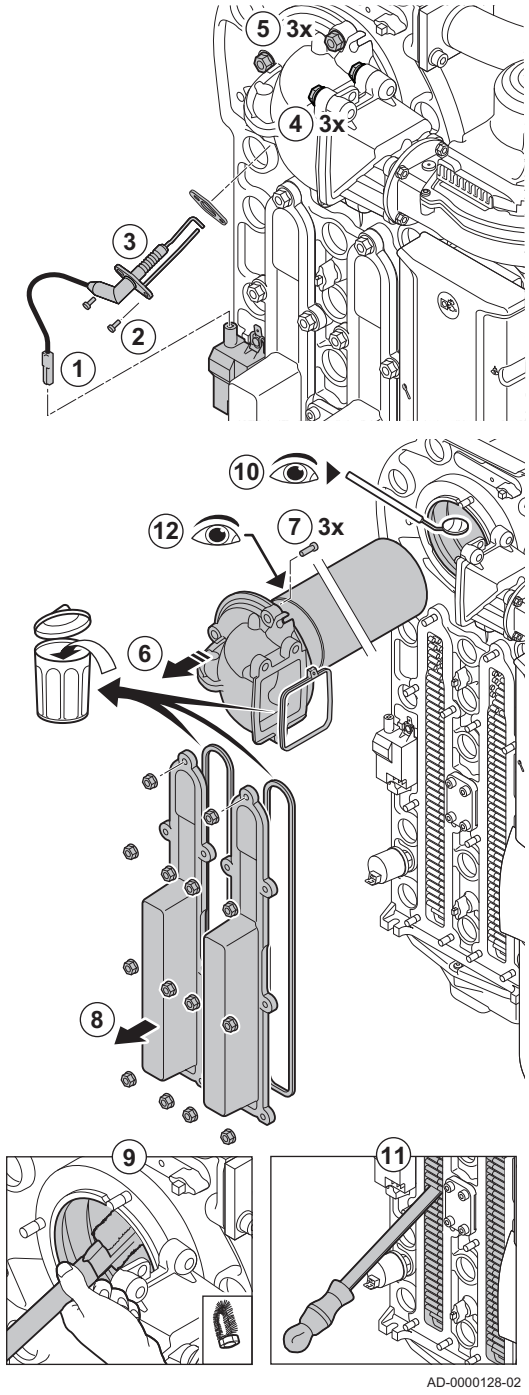

1. Disconnect the plug of the ionisation/ignition electrode from the ignition transformer.

Caution
The ignition cable is fixed to the ionisation/ignition electrode and therefore may not be removed.

2. Loosen the 2 screws of the ionisation/ignition electrode.
3. Remove the ionisation/ignition electrode from the heat exchanger.
4. Undo the 3 bolts from the adapter on the non-return valve holder (15 Nm torque).
5. Undo the 3 nuts from the adapter on the heat exchanger (15 Nm torque).
6. Carefully remove the adapter with burner from the heat exchanger.
7. Remove the 3 bolts from the burner on the adapter and dismantle the burner.
8. Undo the nuts on the inspection ports (7.5 Nm torque).
   ⇨ Remove the inspection ports to reach the heat exchanger.
9. Use a vacuum cleaner to clean the top part of the heat exchanger (furnace).
10. Check (e.g. using a mirror) whether any visible contamination has been left behind. If it has, remove it with the vacuum cleaner.
11. Clean the lower section of the heat exchanger with the special cleaning blade (accessory).
12. Burner maintenance is almost never required; it is self-cleaning:
    12.1. If necessary, carefully clean the cylinder-shaped burner with compressed air.
    12.2. Check that the burner cover of the dismantled burner is free from cracks and/or damage. If not, replace the burner.
13. Reassemble the unit in the reverse order.
14. Open the gas supply and insert the plug in the socket again.

Caution
- Use the specified torques when fitting nuts and bolts.
- Make sure the gaskets are in place when fitting nuts and bolts.

10.3.9 Clean the condensate collector

Fig.85 Clean the condensate collector

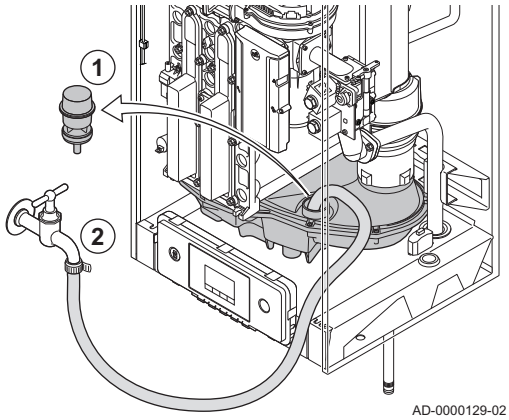

1. Remove the sealing cap from the condensate collector.
2. Rinse the condensate collector thoroughly with a water flow that is as large as possible.

Warning
During rinsing, avoid penetration of water into the boiler or the control panel.

3. Put the sealing cap back on the condensate collector.
4. Disconnect the silicon hose of the air pressure differential switch from the connection nipple on the condensate collector.
5. Clean the opening of the connection nipple thoroughly (by blowing air or pushing an object through it).
6. Reconnect the silicon hose.

10.3.10 Cleaning the siphon

Fig.86 Cleaning the siphon

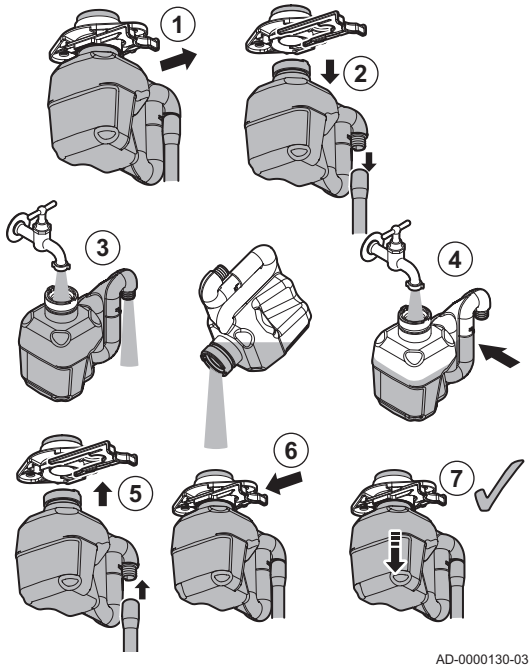

1. Pull the retainer clip of the siphon backwards.
2. Carefully pull the siphon and siphon hose downwards.
3. Clean the siphon with water.
4. Fill the siphon with water up to the mark.
5. Push the siphon firmly into the appropriate opening underneath the boiler and install the siphon hose.
6. Push the retainer clip of the siphon forwards.
7. Check whether the siphon is firmly fitted in the boiler.

Danger
The siphon must always be filled with water. This prevents flue gases from entering the room.

10.4 Specific maintenance work

Perform the specific maintenance work if this proves to be necessary following the standard inspection and maintenance work. To conduct the specific maintenance work:

10.4.1 Replacing the ionisation/ignition electrode

Fig.87 Replacing the ionisation/ignition electrode

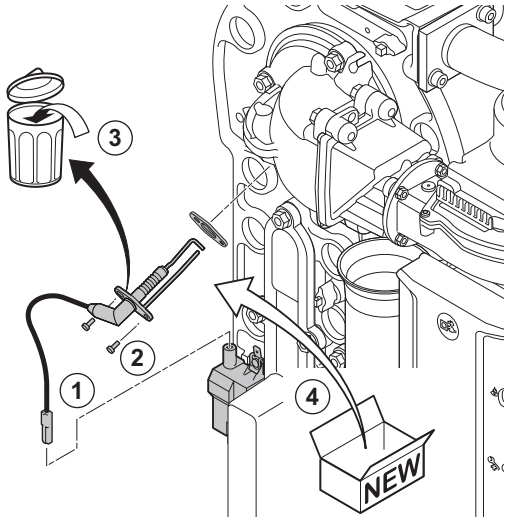

AD-0000131-02

The ionisation/ignition electrode must be replaced if:

- The ionisation current is < 4 µA.
- The electrode is damaged or worn.
- The electrode is included in the service kit.

1. Remove the plug of the electrode from the ignition transformer.

Important
The ignition cable is fixed to the electrode and therefore may not be removed.

2. Unscrew the two screws on the electrode.
3. Remove the entire component.
4. Fit the new ionisation/ignition electrode.
5. Reassemble the unit in reverse order.

10.4.2 Checking the non-return valve

Check the condition of the non-return valve. Replace the non-return valve if it is defective, there is one in the service kit, or if there are traces of condensation on the inside of the fan. Do this as follows:

Fig.88 Checking the non-return valve

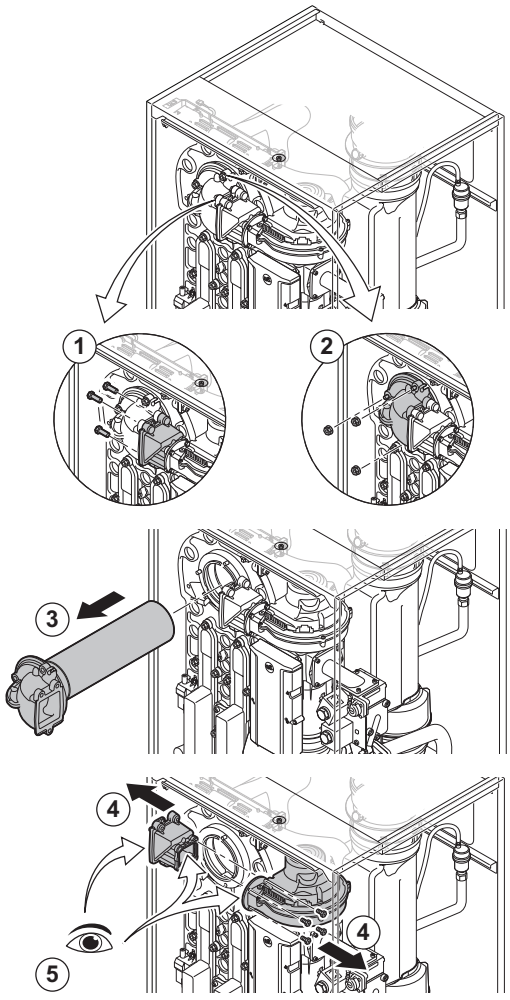

AD-0000134-02

1. Undo the 3 bolts from the adapter on the non-return valve holder (15 Nm torque).
2. Undo the 3 nuts from the adapter on the heat exchanger (15 Nm torque).
3. Carefully remove the adapter with burner from the heat exchanger.
4. Remove the 4 bolts from the fan and remove the non-return valve holder (5.5 Nm torque).
5. Check whether traces of condensation are visible on the inside of the fan. Replace the non-return valve if there are visible traces of condensation.
6. Inspect the non-return valve and replace it in the event of a defect or damage.
7. When replacing the non-return valve, loosen the fixing screw of the non-return valve and remove it.
8. Reassemble in the reverse order.

Caution
- Use the specified torques when fitting nuts and bolts.
- Make sure the gaskets are in place when fitting nuts and bolts.

Fig.89 Putting the boiler into operation

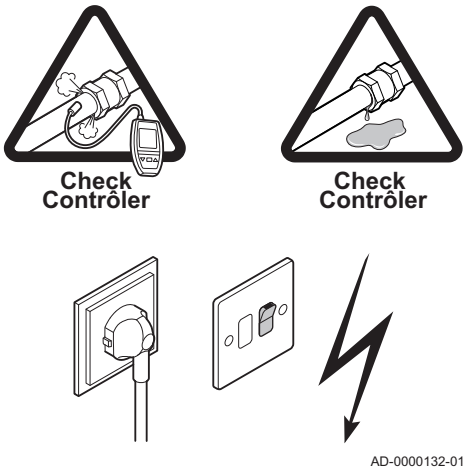

10.4.3 Reassembling the boiler

1. Fit all removed parts in the reverse order.
2. During inspection or maintenance work, always replace all gaskets of the disassembled parts.
3. Check the tightness of the gas and water connections.
4. Put the boiler back into operation.

11 Disposal

11.1 Removal/recycling

Important
Removal and disposal of the boiler must be carried out by a qualified person in accordance with local and national regulations.

To remove the boiler, proceed as follows:

1. Switch off the boiler's electrical connection.
2. Shut off the gas supply.
3. Shut off the water supply.
4. Drain the system.
5. Remove the siphon.
6. Remove the air supply/flue gas outlet pipes.
7. Disconnect all pipes on the boiler.
8. Remove the boiler.

12 Troubleshooting

12.1 Error codes

The boiler is fitted with an electronic regulation and control unit. The heart of the control is a **e-Smart** microprocessor, which controls and also protects the boiler. In the event of an error, a corresponding code is displayed.

Error codes are displayed at three different levels:

- Warning (**A00.00**)

Important
The boiler continues to operate but the cause of the warning must be investigated. A warning can change into a blocking or lock-out.

- Blocking (**H00.00**)

Important
The boiler starts up again automatically when the cause of the blocking has been rectified. A blocking can become a lock-out.

- Lock out (**E00.00**)

Important
The boiler starts up again only when the cause of the lock-out has been rectified and reset manually.

The meaning of the code can be found in the various error code tables. Make a note of the code displayed.

Important
The error code is needed to find the cause of the error quickly and correctly and for any support from Remeha.

12.1.1 Warning - FSB-WHB-HE-150-300

Tab.42 Warning codes

Code	Description	Solution
A01.21	Maximum Dhw Temperature Gradient Level3 Exceeded	Temperature warning: • Check the flow.
A02.06	Water Pressure Warning active	Water pressure warning: • Water pressure too low; check the water pressure
A02.18	Object Dictionary Error	Configuration error: • Reset **CN1** and **CN2** **See** The data plate for the **CN1** and **CN2** values.
A02.37	Uncritical device has been disconnected	SCB PCB not found: • Bad connection: check the wiring and connectors • Faulty SCB PCB: Replace SCB PCB
A02.45	Full Can Connection Matrix	SCB PCB not found: • Carry out an auto-detect
A02.46	Full Can Device Administration	SCB PCB not found: • Carry out an auto-detect

Code	Description	Solution
A02.49	Failed Initialising Node	SCB PCB not found: • Carry out an auto-detect
A03.17	Periodically safety check ongoing	Safety check procedure active: • No action

12.1.2 Blocking - FSB-WHB-HE-150-300

Tab.43 Blocking codes

Code	Description	Solution
H00.36	Second return temperature sensor is either removed or measures a temperature below range	Second return temperature sensor open: • Bad connection: check the wiring and connectors. • Incorrectly fitted sensor: check that the sensor has been correctly fitted. • Faulty sensor: replace the sensor.
H00.37	Second return temperature sensor is either shorted or measures a temperature above range	Second return temperature sensor short-circuited: • Bad connection: check the wiring and connectors. • Incorrectly fitted sensor: check that the sensor has been correctly fitted. • Faulty sensor: replace the sensor.
H01.00	Communication Error occured	Communication error with the security kernel: • Restart the boiler • Replace the CU-GH PCB
H01.06	Maximum difference between heat exchanger temperature and flow temperature	Maximum difference between heat exchanger and flow temperature exceeded: • No flow or insufficient flow: - Check the circulation (direction, pump, valves). - Check the water pressure. - Check the cleanliness of the heat exchanger. - Check that the installation has been correctly vented to remove air. • Sensor error: - Check that the sensors are operating correctly. - Check that the sensor has been fitted properly.
H01.07	Maximum difference between heat exchanger temperature and return temperature	Maximum difference between heat exchanger and return temperature exceeded: • No flow or insufficient flow: - Check the circulation (direction, pump, valves). - Check the water pressure. - Check the cleanliness of the heat exchanger. - Check that the installation has been correctly vented to remove air. • Sensor error: - Check that the sensors are operating correctly. - Check that the sensor has been fitted properly.
H01.08	Delta T Max 3	Maximum heat exchanger temperature increase has been exceeded: • No flow or insufficient flow: - Check the circulation (direction, pump, valves) - Check the water pressure - Check the cleanliness of the heat exchanger - Check that the central heating system has been correctly vented to remove air • Sensor error: - Check that the sensors are operating correctly - Check that the sensor has been fitted properly

Code	Description	Solution
H01.09	Gas Pressure Switch	Gas pressure too low: • No flow or insufficient flow: - Check that the gas valve is fully opened - Check the gas supply pressure • Wrong setting on the GPS gas pressure switch: - Check that the GPS switch has been fitted properly - Replace the GPS switch if necessary
H01.13	Heat Exchanger temperature has exceeded the maximum operating value	Maximum heat exchanger temperature exceeded: • Check the circulation (direction, pump, valves). • Check the water pressure. • Check that the sensors are operating correctly. • Check that the sensor has been fitted properly. • Check the cleanliness of the heat exchanger. • Check that the central heating system has been correctly vented to remove air.
H01.14	Flow temperature has exceeded the maximum operating value	Flow temperature sensor above normal range (high-limit thermostat): • Bad connection: check the wiring and connectors • No flow or insufficient flow: - Check the circulation (direction, pump, valves) - Check the water pressure - Check the cleanliness of the heat exchanger
H01.15	Flue gas temperature has exceeded the maximum operating value	Maximum flue gas temperature exceeded: • Check the flue gas outlet system • Check the heat exchanger to ensure that the flue gas side is not clogged • Faulty sensor: replace the sensor
H02.00	Reset In Progress	Reset procedure active: • No action
H02.02	Waiting For Configuration Number	Configuration error or unknown configuration number: • Reset **CN1** and **CN2**
H02.03	Configuration Error	Configuration error or unknown configuration number: • Reset **CN1** and **CN2**
H02.05	CSU does not match CU type	Configuration error: • Reset **CN1** and **CN2**
H02.09	Partial blocking of the device recognized	Blocking input active or frost protection active: • External cause: remove external cause • Wrong parameter set: check the parameters • Bad connection: check the connection
H02.10	Full blocking of the device recognized	Blocking input is active (without frost protection): • External cause: remove external cause • Wrong parameter set: check the parameters • Bad connection: check the connection
H02.12	Release Signal input of the Control Unit from device external environment	Waiting time release signal has elapsed: • External cause: remove external cause • Wrong parameter set: check the parameters • Bad connection: check the connection
H02.36	Functional device has been disconnected	Communication error with the SCB PCB: • Bad connection with BUS: check the wiring. • No PCB: reconnect PCB or retrieve from memory using auto-detect.

Code	Description	Solution
H03.00	Safety parameters level 2, 3, 4 are not correct or missing	Parameter error: security kernel • Restart the boiler • Replace the CU-GH PCB
H03.01	No valid data from CU to GVC received	Communication error with the CU-GH PCB: • Restart the boiler
H03.02	Measured ionisation current is below limit	No flame during operation: • No ionisation current: - Vent the gas supply to remove air - Check that the gas valve is fully opened - Check the gas supply pressure - Check the operation and setting of the gas valve unit - Check that the air supply inlet and flue gas outlet are not blocked - Check that there is no recirculation of flue gases
H03.05	Gas Valve Control internal blocking occured	Security kernel error: • Restart the boiler • Replace the CU-GH PCB

12.1.3 Lock-out - FSB-WHB-HE-150-300

Tab.44 Lock out codes

Code	Description	Solution
E00.00	Flow temperature sensor is either removed or measures a temperature below range	Flow temperature sensor open: • Bad connection: check the wiring and connectors. • Incorrectly fitted sensor: check that the sensor has been correctly fitted. • Faulty sensor: replace the sensor.
E00.01	Flow temperature sensor is either shorted or measures a temperature above range	Flow temperature sensor short circuited: • Bad connection: check the wiring and connectors. • Incorrectly fitted sensor: check that the sensor has been correctly fitted. • Faulty sensor: replace the sensor.
E00.04	Return temperature sensor is either removed or measures a temperature below range	Return temperature sensor open: • Bad connection: check the wiring and connectors • Incorrectly fitted sensor: check that the sensor has been correctly fitted • Faulty sensor: replace the sensor
E00.05	Return temperature sensor is either shorted or measures a temperature above range	Return temperature sensor short-circuited: • Bad connection: check the wiring and connectors • Incorrectly fitted sensor: check that the sensor has been correctly fitted • Faulty sensor: replace the sensor
E00.08	Heat exchanger temperature sensor is either removed or measures a temperature below range	Heat exchanger temperature sensor open: • Bad connection: check the wiring and connectors. • Incorrectly fitted sensor: check that the sensor has been correctly fitted. • Faulty sensor: replace the sensor.
E00.09	Heat exchanger temperature sensor is either shorted or measures a temperature above range	Heat exchanger temperature sensor short-circuited: • Bad connection: check the wiring and connectors. • Incorrectly fitted sensor: check that the sensor has been correctly fitted. • Faulty sensor: replace the sensor.

Code	Description	Solution
E00.20	Flue gas temperature sensor is either removed or measures a temperature below range	Open circuit in flue gas sensor: • Bad connection: check the wiring and connectors. • Incorrectly fitted sensor: check that the sensor has been correctly fitted. • Faulty sensor: replace the sensor.
E00.21	Flue gas temperature sensor is either shorted or measures a temperature above range	Flue gas sensor short-circuited: • Bad connection: check the wiring and connectors. • Incorrectly fitted sensor: check that the sensor has been correctly fitted. • Faulty sensor: replace the sensor.
E00.40	Water pressure sensor is either removed or measures a temperature below range	Hydraulic pressure sensor open: • Bad connection: check the wiring and connectors. • Incorrectly fitted sensor: check that the sensor has been correctly fitted. • Faulty sensor: replace the sensor.
E00.41	Water pressure sensor is either shorted or measures a temperature above range	Hydraulic pressure sensor short-circuited: • Bad connection: check the wiring and connectors. • Incorrectly fitted sensor: check that the sensor has been correctly fitted. • Faulty sensor: replace the sensor.
E01.04	5x Error of unintended Flame Loss occurance	Flame loss occurs 5 times: • Vent the gas supply to remove air • Check that the gas valve is fully opened • Check the gas supply pressure • Check the operation and setting of the gas valve unit • Check that the air supply inlet and flue gas outlet are not blocked • Check that there is no recirculation of flue gases
E01.12	Return tempearture has a higher temperature value than the flow temperature	Flow and return reversed: • Bad connection: check the wiring and connectors • Water circulation in wrong direction: check the circulation (direction, pump, valves) • Incorrectly fitted sensor: check that the sensor has been correctly fitted • Malfunctioning sensor: check the Ohmic value of the sensor • Faulty sensor: replace the sensor
E02.04	Parameter Error	Configuration error: • Reset **CN1** and **CN2** **See** The data plate for the **CN1** and **CN2** values.
E02.13	Blocking Input of the Control Unit from device external environment	Blocking input is active: • External cause: remove external cause • Wrong parameter set: check the parameters
E02.15	External CSU Timeout	CSU time out: • Bad connection: check the wiring and connectors • Faulty CSU: Replace CSU
E02.17	Gas Valve Control unit communication has exceeded feedback time	Communication error with the security kernel: • Restart the boiler • Replace the CU-GH PCB
E02.35	Safety critical device has been disconnected	Communication fault • Carry out an auto-detect

Code	Description	Solution
E02.47	Failed Connecting Function Groups	Function group not found: • Carry out an auto-detect • Restart the boiler • Replace the CU-GH PCB
E04.00	Safety parameters Level 5 are not correct or missing	Replace the CU-GH PCB.
E04.01	Flow temperature sensor is either shorted or measuring a temperature above range	Flow temperature sensor short circuited: • Bad connection: check the wiring and connectors • Incorrectly fitted sensor: check that the sensor has been correctly fitted • Faulty sensor: replace the sensor
E04.02	Flow temperature sensor is either removed or measuring a temperature below range	Flow temperature sensor open: • Bad connection: check the wiring and connectors • Faulty sensor: replace the sensor
E04.03	Measured flow temperature above savety limit	No flow or insufficient flow: • Check the circulation (direction, pump, valves) • Check the water pressure • Check the cleanliness of the heat exchanger
E04.04	Flue temperature sensor is either shorted or measuring a temperature above range	Flue gas temperature sensor short-circuited: • Bad connection: check the wiring and connectors • Incorrectly fitted sensor: check that the sensor has been correctly fitted • Faulty sensor: replace the sensor
E04.05	Flue temperature sensor is either removed or measuring a temperature below range	Flue gas temperature sensor open: • Bad connection: check the wiring and connectors • Incorrectly fitted sensor: check that the sensor has been correctly fitted • Faulty sensor: replace the sensor
E04.07	Deviation in flow sensor 1 and flow sensor 2 detected	Flow temperature sensor deviation: • Bad connection: check the connection • Faulty sensor: replace the sensor
E04.08	Safety input is open	Air pressure differential switch activated: • Bad connection: check the wiring and connectors • Pressure in flue gas duct is or was too high: - Non-return valve does not open - Siphon blocked or empty - Check that the air supply inlet and flue gas outlet are not blocked - Check the cleanliness of the heat exchanger
E04.09	Deviation in flue sensor 1 and flue sensor 2 detected	Flue gas temperature sensor deviation: • Bad connection: check the connection • Faulty sensor: replace the sensor

Code	Description	Solution
E04.10	5 Unsuccessful burners starts detected	Five failed burner starts: • No ignition spark: - Check the wiring between the CU-GH PCB and the ignition transformer - Check the ionisation/ignition electrode - Check breakdown to earth - Check the condition of the burner cover - Check the earthing - SU PCB faulty: replace the SU PCB • Ignition spark but no flame: - Vent the gas pipes to remove air - Check that the air supply inlet and flue gas outlet are not blocked - Check that the gas valve is fully opened - Check the gas supply pressure - Check the operation and setting of the gas valve unit - Check the wiring on the gas valve unit - Replace the CU-GH PCB • Flame present, but ionisation has failed or is inadequate: - Check that the gas valve is fully opened - Check the gas supply pressure - Check the ionisation/ignition electrode - Check the earthing - Check the wiring on the ionisation/ignition electrode.
E04.11	VPS Gas Valve proving failed	Gas leakage control fault: • Bad connection: check the wiring and connectors • Gas leakage control VPS faulty: Replace the GPS • Gas valve unit faulty: Replace the gas valve unit
E04.12	False flame detected before burner start	False flame signal: • The burner remains very hot: Set the O_2 • Ionisation current measured but no flame should be present: check the ionisation/ignition electrode • Faulty gas valve: replace the gas valve • Faulty ignition transformer: replace the ignition transformer
E04.13	Fan speed has exceeded normal operating range	Fan fault: • Bad connection: check the wiring and connectors. • Fan operates when it should not be operating: check for excessive chimney draught • Faulty fan: replace the fan
E04.15	The flue gas pipe is blocked	Flue gas outlet is blocked: • Check that the flue gas outlet is not blocked • Restart the boiler
E04.17	The driver for the gas valve is broken	Gas valve unit fault: • Bad connection: check the wiring and connectors • Faulty gas valve unit: Replace the gas valve unit
E04.23	Gas Valve Control internal locking	• Restart the boiler • Replace the CU-GH PCB

12.1.4 Error memory

The control panel includes an error memory in which the last 32 errors are stored. Details of the error are stored with the error codes. Included are the status, sub-status, flow temperature, return temperature, fan rotation speed and the ionisation current.

■ Reading out the Error memory

1. Navigate to the Error menu.
2. Press the ↵ key to open the menu.

Fig.90 Step 2

3. Keep pressing the + key until the required device, control PCB or zone is displayed.

Fig.91 Step 3

4. Press the ↵ key to confirm the selection.

Fig.92 Step 4

5. Press the ↵ key to view the error messages.
   XX is the number of stored error messages.

Fig.93 Step 5

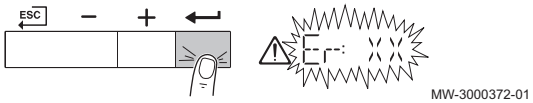

6. Press the + or − key to scroll through the list of messages.

Fig.94 Step 6

7. Press the ↵ key to view details of the message.

Fig.95 Step 7

8. Press the + or − key to scroll through the details.

Fig.96 Step 8

9. Press the ESC key multiple times to go back to the main display.

Fig.97 Step 9

■ Clearing the error memory

1. Navigate to the Error menu.
2. Press the ↵ key to open the menu.

Fig.98 Step 2

3. Keep pressing the + key until the required device, control PCB or zone is displayed.

Fig.99 Step 3

4. Press the ↵ key to confirm the selection.

Fig.100 Step 4

Fig.101 Step 5

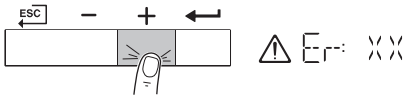

MW-3000375-01

Fig.102 Step 6

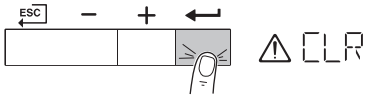

MW-3000376-01

Fig.103 Step 7

MW-3000440-01

5. Keep pressing the + key until the clear error memory menu is displayed.

6. Press the ↵ key to delete the errors from the error memory.

7. Press the ESC key to go back to the main display.

13 Appendix

13.1 ErP information

13.1.1 Product fiche

Tab.45 Product fiche

Remeha - Quinta Ace		160
Seasonal space heating energy efficiency class		-
Rated heat output *(Prated or Psup)*	kW	152
Seasonal space heating energy efficiency	%	-
Annual energy consumption	GJ	-
Sound power level L_{WA} indoors	dB	63

See
For specific precautions in relation to assembly, installation and maintenance: Safety, page 6

13.2 EC declaration of conformity

The unit complies with the standard type described in the EC declaration of conformity. It has been manufactured and commissioned in accordance with European directives.

The original declaration of conformity is available from the manufacturer.

13.3 Checklist for commissioning

Tab.46 Checklist

No.	Commissioning tasks	Confirmation
1	Fill the system with water and check the water pressure	
2	Fill the siphon with water	
3	Vent the central heating system	
4	Check water-side connections for tightness	
5	Check the gas supply pressure	
6	Check the capacity of the gas meter	
7	Check the gas tightness of the connections and gas pipes	
8	Vent the gas supply pipe	
9	Check the electrical connections	
10	Check the flue gas outlet/air supply connections	
11	Checking the function and operational status of the boiler	
12	Check the air-gas ratio	
13	Remove the measuring equipment and close the measuring points	
14	Correctly fit the front housing of the boiler	
15	Set the room thermostat or the control	
16	Instruct the user and hand over the necessary documents	
17	Complete the guarantee card online	
18	Confirm the commissioning	
	Date . .	dd-mm-yy
	Company name, signature of engineer . .	

13.4 Checklist for annual maintenance

Tab.47 Checklist for annual maintenance

No.	Inspection and/or servicing work	Confirmation		
1	Check the water pressure			
2	Check the water quality			
3	Check the ionisation current			
4	Check the air supply/flue gas discharge connections			
5	Check the combustion (O_2/CO_2) at full load and low load			
6	Checking the automatic air vent			
7	Checking the burner and cleaning the heat exchanger			
9	Cleaning the siphon			
10	Assembly of the boiler (replace removed gaskets)			
11	Boiler inspected visually			
12	Maintenance kit A, B or C used			
13	Maintenance message reset			
14	Extra maintenance work that was undertaken			
	. . .			
	. . .			
	. . .			
	. . .			
	. . .			
15	Confirmation of inspection			
	Date . .	dd-mm-yy	dd-mm-yy	dd-mm-yy
	Company name, signature of engineer . .			

© Copyright

All technical and technological information contained in these technical instructions, as well as any drawings and technical descriptions supplied, remain our property and shall not be multiplied without our prior consent in writing. Subject to alterations.

remeha

T +44 (0)118 978 3434

F +44 (0)118 978 6977

E boilers@remeha.co.uk

Remeha Commercial UK
Innovations House
3 Oaklands Business Centre
Oaklands Park
RG41 2FD Wokingham

CE