Technical information

Remeha Gas 210 ECO

Remeha Gas 210 ECO

- High efficiency condensing boiler with low NO_X emission
- Ranges: 8-214 kW

remeha

INHOUD

PREFACE

Read these instructions carefully before putting the boiler into operation, familiarise yourself with its control functions, operation and strictly observe the instructions given. Failure to do so may invalidate warranty or prevent the boiler from operating.

The installation and commissioning of the boiler must be carried out by a competent Engineer, with the relevant certification i.e.: CORGI, ACOPS, IEE regs. On completion a copy of the commissioning sheet should be returned to Broag Ltd. for record purposes.

If you have any questions, or if you need more information about specific subjects relating to this boiler or its installation please do not hesitate to contact us.
The data published in these technical instructions is based on the latest information (at date of publication) and may be subject to revisions.
We reserve the right to continuous development in both design and manufacture, therefore any changes to the technology employed may not be retrospective nor may we be obliged to adjust earlier supplies accordingly.

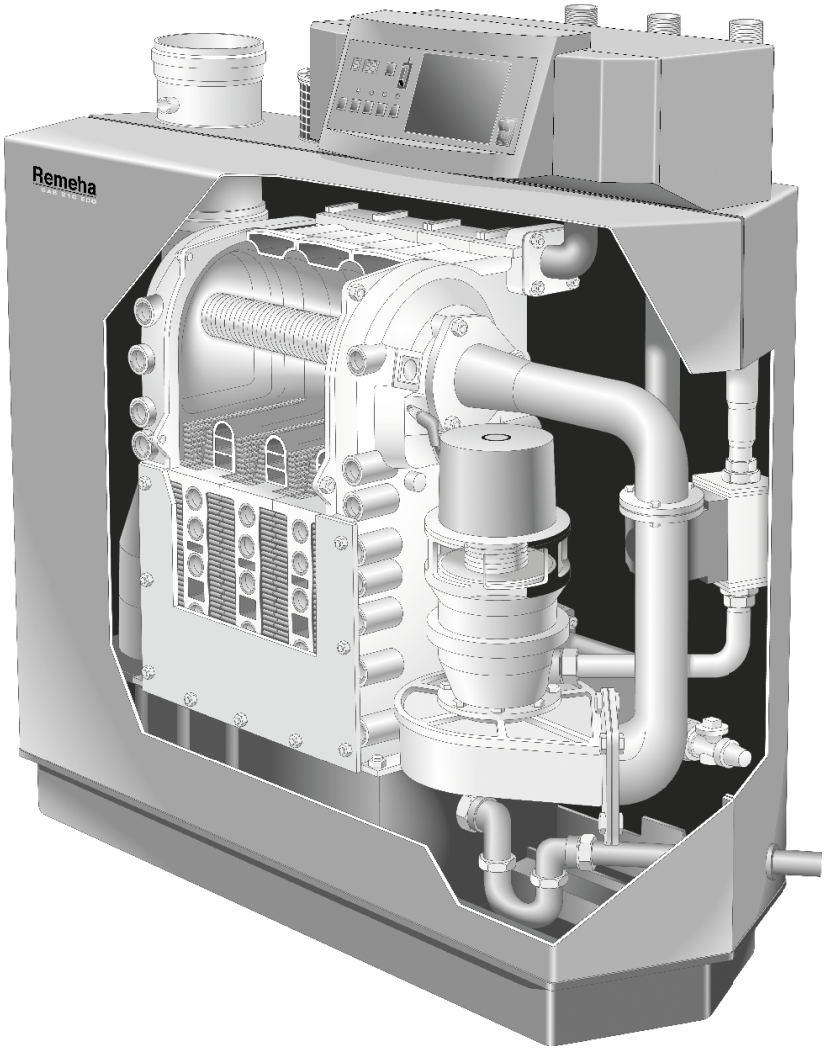

Fig. 01 Artist impression Gas 210 ECO
3D.AL.21H.000001

1 SAFETY INSTRUCTIONS

1.1 Symbols

The following symbols are used in this document to emphasise certain instructions. This is in order to increase your personal safety and to safeguard the technical reliability of the boiler.

⚠ Instructions must be followed closely to avoid personal injury or serious damage to the unit or the environment.

⚠ ***Important!!*** Instructions are of essential importance for the correct functioning of the unit.

⚠ Indicates possible danger of electric shock. Serious personal injury may occur.

Instructions contain useful information.

Read and familiarise yourself with these instructions.

General Instructions

Keep unauthorised personnel away from the boiler. Do not place objects on or against the boiler. Do not touch hot water connections or the flue outlet when the boiler is operating – burn hazard.

⚠ **Danger**

This boiler is connected to a 230v mains supply. An improper installation or attempts to repair electrical components or controls may result in life threatening situations.

⚠ **Be aware of gas escapes**

If you smell gas, close the (main) gas cock and contact the emergency gas leak telephone number for your area. **DO NOT ISOLATE THE POWER SUPPLY TO THE BOILER OR ANY OTHER APPLIANCE.**

⚠ **Be aware of flue gas leaks**

If you smell flue gas fumes, turn the boiler off and contact your service company or installer.

⚠ **Be aware of water leaks**

If you see water leaking from the boiler, turn it off and contact your Service Company or installer.

⚠ **Working on the boiler**

Installation, commissioning, maintenance and repair work must only be carried out by suitably qualified specialist. Engineer in accordance with all relevant national/ local standards and certifications.
Always disconnect the mains supply and close the main gas cock before working on the boiler.

Casing panels should only be removed for maintenance and servicing purposes.
Refit all panels on completion of maintenance or servicing before putting the boiler back into service.

Instruction and warning labels on the boiler must never be removed or covered and must be clearly legible throughout the entire service life of the boiler. Damaged or illegible instruction and warning labels must be replaced immediately.
Generally applicable safety instructions related to accident prevention must be consulted in addition to the information supplied in this technical documentation.

Boiler modifications and spare parts

The boiler must not be modified or non-Remeha spare parts fitted without the express written approval of Remeha.

2 GENERAL BOILER DESCRIPTION

The Remeha Gas 210 ECO boiler is a pre-assembled, free standing, gas fired, high efficiency condensing boiler.
The sectional cast aluminium heat exchanger and other major components are contained within a sealed air box. This forms the main boiler casing with a removable inspection hatch for maintenance purposes. All electrical and electronic controls are contained within the instrument panel mounted on top of the boiler.
The flue gas outlet, combustion air inlet, flow, return and gas connections are located on the top of the boiler with a condensate connection at low level on the right hand side.
The boiler is suitable for room sealed or open flue applications and has been designed for central heating and indirect hot water production at working pressures not exceeding 6 bar. It must be installed on a fully pumped system and is suitable for use on both sealed and open vented installations (minimum operating pressure open vented 0.3 bar).
The pre-mix gas burner (NG only) with its gas/air ratio control system ensures clean, trouble free operation with higher than average efficiencies 109% (NCV) in the condensing mode combined with ultra low NO_X and minimum CO emissions. The standard control package allows actual and set values to be read and adjusted on the built in digital display which also provides normal operating and fault code indication.
An intelligent, advanced boiler control ('***abc***®') continuously monitors the boiler conditions, varying the heat output to suit the system load. The control is able to react to external "negative" influences in the rest of the system (flow rates, air / gas supply problems) maintaining boiler output for as long as possible without resorting to a lockout condition. At worst the boiler will reduce its output and/or shutdown (shut off mode) awaiting the "negative" conditions to return to normal before re-starting.
The '***abc***®' control cannot override the standard flame safety controls.
Every Remeha Gas 210 ECO is checked following assembly by means of a test computer to ensure its proper operation.

The boiler meets the requirements of the EC regulations of the directives:
- Gas Appliances Directive, 90/ 396/ EEC
- Efficiency Directive, 92/ 42/ EEC
- E.M.C. Directive, 89/ 336/ EEC
- Electrical Low Voltage Directive, 73/23/EEC
- Pressure Equipment Directive, no. 97/ 23/ EEC, art. 3, item 3.

CE Reference number : 0063 BL 3264.

3 CONSTRUCTION

3.1 Boiler layout

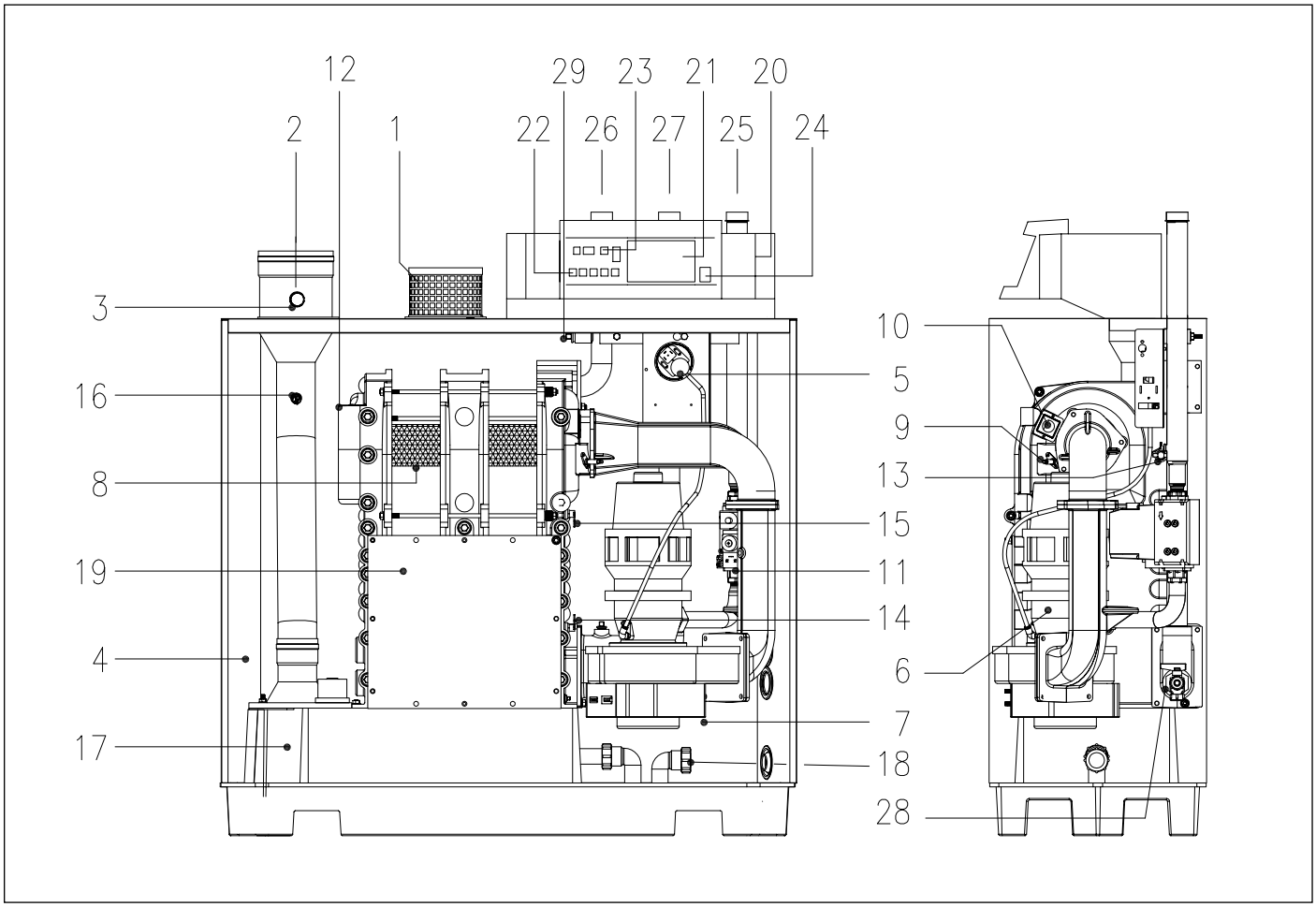

Fig. 02 Cut away view of Remeha Gas 210 ECO (160 kW model shown)

1. air supply
2. flue gas outlet
3. combustion test point (O_2/CO_2)
4. sealed air box
5. differential air pressure switch (LD2)
6. IMS gas-air ratio control
7. air supply fan
8. pre-mix, fibre faced burner
9. combined ignition/ionisation probe
10. sight glass
11. gas valve multiblock (with governor)
12. cast aluminium, sectional heat exchanger
13. temperature sensor - flow
14. temperature sensor - return
15. temperature sensor - heat exchanger
16. temperature sensor - flue gas
17. drain pan (condensate)
18. condensate connection
19. heat exchanger inspection hatch
20. instrument panel
21. facility for incorporating a ***rematic***® weather compensator (optional)
22. boiler setting keys
23. read-out display and reset key
24. on/off switch
25. gas connection
26. flow connection
27. return connection (standard)
28. drain cock and optional second return connection (when fitted) or optional low level return connection instead of standard return connection
29. connection for optional thermostat pocket (for use with external sequence control).

3.2 Operation principle

Combustion air is drawn into the closed air box through the air inlet from the plant room (open flued) or from outside via the eccentric flue system (room sealed) by an air supply fan.
On the inlet side of the fan is a specially designed IMS (Integrated Mixing System) gas / air ratio control unit which takes gas from the gas valve multiblock and mixes it in the correct proportions with the incoming air. The IMS-system includes regular auto-calibration (every 12 hours), which guarantees a constant air/gas ratio. Therefore this mechanical mixing system ensures the correct mixture is delivered to the pre-mix burner at all times.
Depending on demand (under the dictates of flow/ return sensor and other external/internal control inputs) the '***abc***®' system determines the boiler output, which directly controls the volume of mixed gas and air to the premix burner. This mixture is initially ignited by the combined ignition/ionisation probe, which monitors the state of the flame. Should the flame be unstable or not ignite within the pre-set safety time cycle the controls will (after 5 attempts) shut the boiler down requiring manual intervention to reset the boiler. The digital display will indicate a flashing fault code confirming the reason for the failure.
The products of combustion in the form of hot flue gases are forced through the heat exchanger transferring their heat to the system water (the flue gas temperature is reduced to approximately 5°C above the temperature of the system return water). Then they are discharged via the condensate collector, vertically through the 150 mm connection to atmosphere.
Because of the low flue gas exit temperature there will be a vapour cloud formed at the flue gas terminal - this is not smoke, simply water vapour formed during the combustion process.
If the controls allow the flow and therefore return temperature to fall below dew point (55°C) this water vapour will begin to condense out in the boiler, transferring its latent heat into the system water, increasing the output of the boiler without increasing the gas consumption.
Condensation formed within the boiler and flue system is discharged from the boiler to an external drain via the drain pan / siphon supplied.
The boiler can be supplied, as an option with a second (fixed temperature) return connection. This additional connection enables the boiler to make full use of its condensing ability whilst accepting both fixed and variable temperature returns from the same system.
Fig. 01

4 TECHNICAL DATA AND DIMENSIONS

4.1 Dimensions

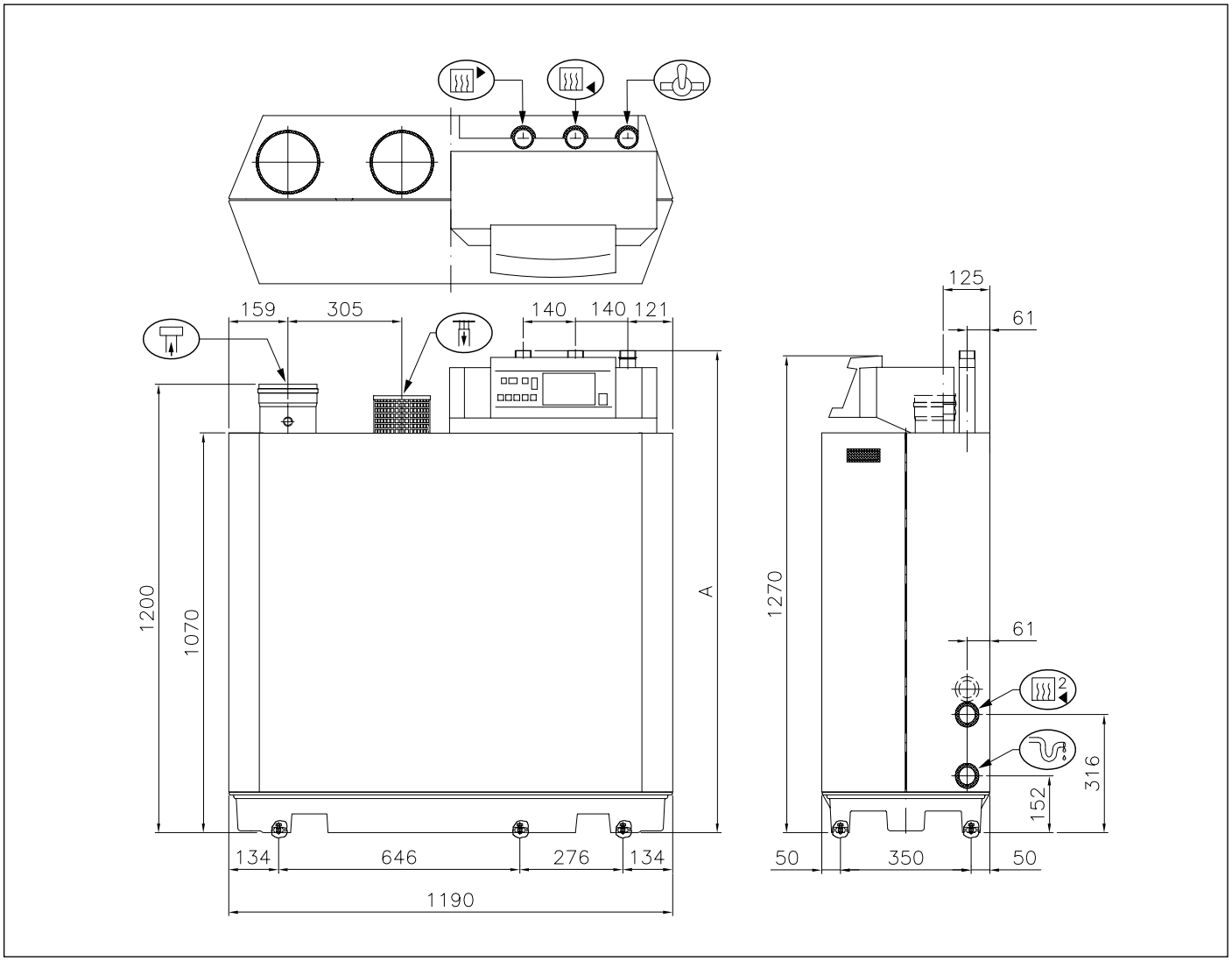

Fig. 03 View drawings

Flow connection	80, 120 en 160 kW: 1¼" BSP (m) ;	200 kW: 1½" BSP (m)
Return connection (standard)	80, 120 en 160 kW: 1¼" BSP (m) ;	200 kW: 1½" BSP (m)
Gas connection	1¼" BSP (m)	
Condensate connection	32 mm o/d (plastic)	
Flue gas connection	150 mm i/d	
Combustion air supply connection	150 mm i/d	
Second return connection*	1¼" BSP (m) (optional).	
Height **A**	80, 120 en 160 kW: 1290 mm;	200 kW: 1305 mm

*or optional low level return connection instead of standard return connection

4.2 Technical data

Boiler type			Remeha Gas 210 ECO - 80	Remeha Gas 210 ECO - 120	Remeha Gas 210 ECO - 160	Remeha Gas 210 ECO - 200
General						
Number of sections		qty.	3	4	5	6
Casing Colour		BS RAL	2002 (red) / 9023 (grey)			
Boiler control options (external input, two wire control)			On/off, High/low, Analog 0-10V Communicating Modulation			
Nominal output (80/60°C) Pn	min.	kW	8	12	16	20
	max.	kW	80	120	160	200
Nominal output (40/30°C) Pn	min.	kW	8.9	13.5	18.1	22.7
	max.	kW	86	129	171	214
Nominal input (GCV / Hs) Qn	min.	kW	9.3	14	18.7	23.3
	max.	kW	90.6	135.6	181.1	227
Nominal input (NCV / Hi) Qn	min.	kW	8.4	12.6	16.8	21
	max.	kW	81.5	122	163	204
Weight dry		kg	130	150	170	200
Noise level at 1m from boiler, room sealed		dBA		≤ 57		≤ 59
Gas and Flue						
Inlet pressure gas	min.	mbar	17			
	max.	mbar	50			
Gas consumption (natural gas)		m^3/h	8.6	12.9	17.2	21.6
NO_X-emission		mg/kWh	< 35			
NO_X-emission (O_2 = 0%, dry)		ppm	< 20			
Residual fan duty		Pa	115	100	100	140
Flue gas mass		kg/h	137	205	274	343
Water side						
Flow temperature	max.	°C	110			
	operating	°C	20 - 90			
Operating pressure - open vented	min.	bar	0.3			
- closed	min.	bar	0.8			
	PMS max.	bar	6			
Water contents		liter	12	16	20	24
Water resistance at 11°C ΔT		mbar	496	446	536	720
Water resistance at 20°C ΔT		mbar	150	135	162	180
Electrical						
Main supply		V / Hz	230 / 1 / 50			
Power consumption	min.	Watt	68	58	69	75
	max.	Watt	92	84	110	160
Insulation class		IP	20			

Table 01 Technical data

4.3 Quotation specifications

- Cast aluminium - sectional pre-mix gas fired boiler
- Sectional heat exchanger manufactured from cast aluminium
- Maximum operating pressure of 6 bar
- Maximum operating temperature of 90°C
- Ultra low NO_X (max. 20 ppm, O_2= 0%, dry)
- Pre-mix, fully modulating (10-100%) gas burner with unique IMS gas/air ratio control for maximum efficiency
- Intelligent advanced boiler control '***abc***®' c/w a comprehensive operating, service and fault diagnostic facility
- No minimum flow requirement
- Available as conventional flue or room sealed operation
- Capable of remote BMS control (0-10V modulating, on/off and high/low option)
- Socket for advanced service diagnostics (for PC connection)
- Supplied fully factory assembled and tested
- Powder coated enamel steel casing BS RAL colour 2002 (red) / 9023 (grey)
- Sealed air box construction for maximum safety
- Suitable for use with Natural gas
- Supplied as standard with on/off switch, temperature indication, flow, return, heat exchanger block and flue gas sensors and hours run indication
- Supplied as standard with indicating module No. 1 lockout indication (Volt free), shutdown indication (Volt free), boiler on indication (24 Volt AC)
- Efficiencies up to 109% (NCV / Hi)
- Manufactured to ISO 9001
- CE approved.

4.4 Optional Accessories

- Modulating weather-compensated / optimising boiler controls for single and multiple installations
- Thermostat pocket
- Second return connection
- Water pressure sensor
- Air supply filter c/w air supply connecting piece (for use during building construction)
- Vertical room sealed terminal c/w air supply connecting piece
- Indicating module No. 2 indicating operation, boiler on and high fire (Volt free)
- Recom communication kit (includes CD-rom, interface and wiring)
- Interface for communication with several boiler controls *(see par. 9.4)*
- Special cleaning tool
- Valve leak proving system
- Minimum gas pressure switch
- Low level return connection.

5 EFFICIENCY INFORMATION

5.1 Annual efficiency
Up to 108.2% at Hi (up to 97% at Hs) at an average water temperature of 35°C (40/30°C).

5.2 Heat to water efficiency
a. Up to 98% at Hi (88% at Hs) at an average water temperature of 70°C (80/60ºC).
b. Up to 109% at Hi (98% at Hs) at an average water temperature of 35°C (40/30ºC).

5.3 Standing losses
< 0.3% at Hi (0.33% at Hs) at an average water temperature of 45°C.

NCV = Hi, GCV = Hs

6 APPLICATION INFORMATION

The Gas 210 ECO can be used on all new and refurbishment projects in both single and multiple configurations. Conventional and room sealed flue system capability means that the boiler can be sited almost anywhere within a building. The Remeha range of weather compensators (options) are able to communicate directly with the boiler controls to make full use of its fully modulating feature, ensuring that the boiler closely matches the system demand at all times. External control systems (BMS) can be interfaced with the boiler to provide on/off - high/low or modulating (0-10V) control options.

7 CONTROL AND SAFETY EQUIPMENT

7.1 The instrument panel

7.1.1 General
The boiler is supplied with a standard set of defaults pre-programmed for normal operation but can be tailored by the Engineer to suit most site conditions. These values are set and read using the built in control panel or with a note book computer (with optional software and interface).
For security the control has three levels of access:
1. User level - free access
2. Service level - access with service code by qualified personnel
3. Factory level - access by PC with factory code (Remeha only).

7.1.2 Layout of the instrument panel
The instrument panel consists of the following components (see *Fig. 04 and Table 02*):
1 Operation switch
2 PC/ PDA connection for Recom setting and monitoring
3 Facility for incorporating an optimising / weather compensator

The functions of keys and displays (letters a - h) are explained in *Table 02*.

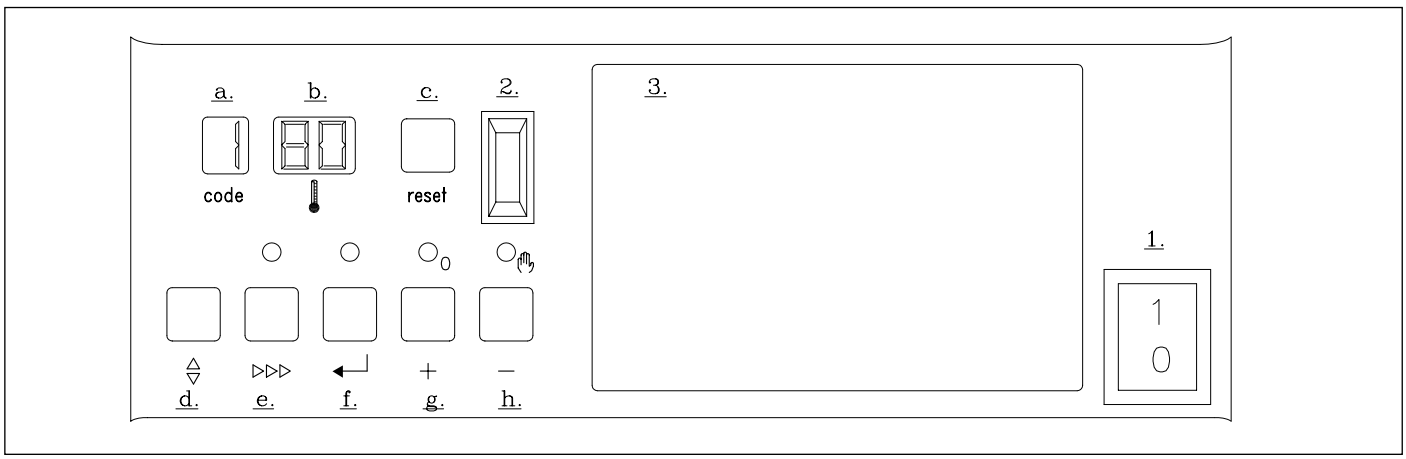

Fig. 04 Instrument panel

a. **code**-display		
Indicates on user level:	operating mode	- 1 digit or letter
	setting mode	- 1. digit or letter with dot
	read-out mode	- 1. digit or letter with flashing dot
	shut-off mode	- letter b
	forced full load	- letter H
	forced part load	- letter L
	test phase IMS	- letter t
Additional indication on service level:	failure mode	- 1 digit flashes
	boiler run information mode	- successively 1 + , + ,
b. (🌡)-display		
Indicates:	temperatures	
	settings	
	shut-off codes	
	lockout codes	
c. **reset**-key:	to reset boiler after a lockout	
d. ⇕-key:	program function: key to select the required mode (**mode**-key)	
e. ▹▹▹-key:	program function: key to select the required program within the selected mode (**step**-key)	
f. ↵-key:	program function: key to save the settings (**store**-key)	
g. [**+**]-key:	program function: to select a higher setting	
h. [**-**]-key:	program function: to select a lower setting	
h. [**-**]-key held for 2 seconds	switch function: manual override (hand/auto)	

Table 02 Instrument panel functions

7.1.3 Indication LED's

The instrument panel has two indicating LED's.

1. The LED above the [**-**]-key (in the (✋)-symbol) when illuminated green confirms the boiler is in manual override (see *par. 7.1.4*).
2. The LED above the [**+**]-key (in the **0**-symbol) when illuminated green confirms that the IMS system is completely closed (rest position).

7.1.4 Manual override (hand/auto or forced modes 'high' and 'low')

Some of the keys on the instrument panel have a double function.

- Normal function - program input (see *par. 7.5 and 7.6*)
- Manual override - (during these modes as described below the flow temperature cannot exceed its pre-set maximum).

Hand/auto

When the [**-**]-key is pressed and held for 2 seconds the boiler will run, even if external controls are not calling for heat. The green LED above this key (in the (✋)-symbol) will illuminate indicating manual override.
By pressing and holding for 2 seconds the [**-**]-key, the boiler will return to normal (auto control).

⚠ **Attention: A (system) pump that isn't connected to the terminal strip of the boiler control will not be activated!**

Forced mode 'high' (H □□)

By pressing the ⇕ and [**+**]-key simultaneously in operating mode during 2 seconds, the boiler will run at maximum power. The letter H will now appear on the display.
By pressing the [**+**]- and [**-**]-keys simultaneously, the boiler will return to operating mode.
Following a manual override the boiler will return to normal (auto control) if no keys are used within a 15-minute period.

Forced mode 'low' (L □□)

By pressing the ⇕ and [**-**]-key simultaneously in operating mode, the boiler will run at minimum power. The letter L will now appear on the display.
By pressing the [**+**]- and [**-**]-keys simultaneously, the boiler will return to operating mode.
Following a manual override the boiler will return to normal (auto control) if no keys are used within a 15-minute period.

7.1.5 Display of values with more than two digits

The display has only two digits available therefore values over this are displayed as follows:

- negative values will be indicated by a dot behind the last digit e.g. 1 0. = -10
- values from 00 to 99 will be indicated without any punctuation marks
- values from 100 to 199 will be indicated by a dot between both digits e.g. 0. 0 = 100, 1. 0 = 110, 9. 9 = 199
- values from 200 to 299 will be indicated by a dot behind every digit e.g. 0. 0. = for 200, 1. 0. = 210, 9. 9. = 299
- values over 300 will be indicated by showing the thousands, hundreds, tens and units in separate alternating pairs.

7.2 Flow diagram control system

	press the ⇕-key	press the ▷▷▷-key
	code-display	🌡-display
Operating mode, see *par. 7.3*	only digit or letter	
	0 - 9, H, L, b, t	Flow temperature, shut-off code
Setting mode, see *par. 7.5 and 7.6*	digit or letter with dot	
	1.	Flow temperature setpoint
	2.	Pump run on time
	A.	Boiler control setting
	service engineer level only:	
	4.	Low fire start point as percentage
	5.	Boiler output as % to indicate high fire*
	6.	Maximum output
	7.	Forced part load
	8.	Forced part load running time
	9.	Cycling prevention delay-time
	a.	Start point for 0 Volt analogue signal
	b.	End point for 10 Volt analogue signal
	C.	n/a
	d.	n/a
	E.	ΔT from control stop point to start point
	F.	n/a
	G.	High limit temperature setpoint
	H.	Modulation start point ΔT
	I.	Minimum water pressure*
	J.	Adjustments options/accessories
	L.	n/a
	P.	Boiler type, factory set
Read-out mode, see *par. 7.7*	digit or letter with flashing dot	
	1.	Actual flow temperature
	2.	Actual return temperature

	3.	Actual flue gas temperature
	4.	Actual outdoor temperature (with outside temperature sensor)
	5.	Actual heat exchanger temperature
	6.	Flow temperature (setpoint)
	7.	Actual heat demand status and differential air pressure switch position
	8.	Actual open to close time IMS
	9.	Requested output
	A.	Calculated or actual output
	b.	Status IMS
	C.	Actual valve position IMS
	d.	Actual water pressure*
	E.	Actual Δp over burner and heat exchanger*
	F.	Actual fan speed
	G.	Actual ionisation level
	H.	Minimum position IMS
Failure mode, see *par. 7.8*	digit flashes	digits flash
	1	Failure code (*chapter 11*)
	2	Operating mode during failure (*par. 7.3*)
	3	Flow temperature during failure
	4	Return temperature during failure
	5	Flue gas temperature during failure
	6	Position of IMS during failure
Counter mode, see *par. 7.9*	digit + , + ,	digits flash
	1, , ,	Number of operating hours burner
	2, , ,	Number of successful ignition attempts
	3, , ,	Total number of start attempts

* Note: Only active when optional module / sensor is fitted.
Table 03 Flow diagram control system

7.3 Operating mode (X □□)

During normal operation the **code**-display shows the status (position in cycle) of the boiler, with the (🌡)-display indicating the actual flow temperature.

The digits or letters in the code-display have the following meaning:

0	Standby; there is no heat demand from control system or IMS is moving to maximum
1	Pre-purging (12 seconds)
2	Ignition
3	The burner is firing
5	Waiting mode; the fan runs and the boiler waits until sufficient air transport is established (air pressure switch open or closed)
6	Normal control stop during heating (heat demand, boiler not firing, pump running): - flow temperature > setpoint + 5 °C - flow temperature > desired setpoint modulating control + 5 °C - flow temperature > 95 °C - flow temperature - return temperature > ΔT from control stop point to start point - analog input voltage between 0.5 and 1.0 volt - cycling prevention delay-time earlier heat demand still running - return temperature ≥ flow temperature + 3 °C; boiler starts firing at minimum load; after 1 minute it goes to shut-off (b. 2.4); It will restart when return temperature ≤ flow temperature + 3 °C
7	Pump overrun time
b	Shut-off mode
H	Forced full load
L	Forced part load
t	Test phase IMS (when no signal is being observed by the control unit: in total 3 attempts before lockout)

Table 04 Operating codes

7.4 Shut-off mode (b X.X.)

⚠ ***Important!!*** The shut-off mode is a special operating mode due to an abnormal situation. During shut-off, the **code** window displays b and the (🌡) -window indicates the shut-off code.
The boiler control will, at first, try several times to start de boiler again. If this fails, the boiler will go into a failure. The boiler can only operate again when the causes of the shut-off have been removed.
A shut-off may indicate a system problem or an incorrect parameter setting.
In case of a heat-related shut-off the pump, if connected to the boilers control unit, will remain operational.
Table 05 details cause of shut-off mode.

Code	Description	Cause/control points
b 0.8.	Insufficient air transport during pre-purge. After 5 attempts the boiler will go to lockout code 08 (see *par. 11.2*).	Check: - flue gas discharge/air supply for clogging - air pressure switch and connections.
b. 2.4.	Return temperature is higher than flow temperature. If the boiler registers a higher return temperature than flow, it will modulate to minimum setpoint and run for 10 minutes. If return temperature remains higher than the flow the boiler will shutdown and wait for return temperature to fall below flow temperature.	- flow and return sensors wiring reversed - flow and return connections reversed.
b. 2.5.	Flow temperature rate of rise exceeded. The boiler will shut-off for ten minutes, then restart. Should the rate of temperature rise remain the same after 5 start attempts (within one heat demand cycle), this code will be recorded as a shutdown failure and cycle repeated.	Check: - system full of water and under pressure - pumps are running - water flow through the boiler.
b. 2.6.	If minimum gas pressure switch is connected (option) and pressure is below minimum setpoint. Boiler shuts down for 10 minutes. The boiler will try again, if gas pressure is still below minimum it will shutdown again and repeat the cycle until pressure is reinstated.	- check gas supply - is gas valve open? - check set value of the gas pressure switch - check wiring.

6. 3.0.	Flow / return Δt factory-set maximum exceeded. The boiler will shut off for 150 seconds and then restart. Should the ΔT conditions remain the same after 20 attempts (within one heat demand cycle), this code will be recorded as a shutdown failure and the cycle repeated.	Check: - system full of water and under pressure - pumps are running - water flow through the boiler.
6. 4.3.	One or several adjusted parameters out of range including some factory defaults that should not have been changed.	Reset parameters. Press the **reset**-key directly followed by pressing and holding the ⇕-key for 5 seconds. Code display shows P.. Enter correct boiler type parameter, see table in *par. 7.6.*
6. 5.2.	Maximum flue gas temperature setpoint is exceeded. Boiler shuts down for 150 seconds, then restarts. This cycle is repeated if necessary. When boiler exceeds maximum flue gas temperature with 5°C, the boiler will go to lockout code 52 (see *par. 11.2*).	Check: - the flue gas temperature setpoint - the gas/air settings - if the heat exchanger is clean.
6. 6.2.	If water pressure sensor is connected (option) and pressure is below minimum set point. Boiler will shutdown and stop the pump (if connected to the boilers control unit). It will restart only if water pressure is re-instated.	Check: - system pressure - minimum water pressure setpoint - sensor - wiring.
6. 8.8.	External interlock has opened. When the interlock closes, the control stop or shut-off mode is cancelled.	Cancel the shut-off by removing the cause.
6. 9.4.	Heat exchanger and flow temperature ΔT is exceeded (5°C). Boiler shuts down for 10 minutes then restarts. Should the conditions remain the same after 5 successive attempts within one heat demand cycle, this code will be recorded as a shutdown failure and the cycle will repeat.	Check: - system full of water and under pressure - pumps are running - water flow through the boiler.

Table 05 Shut-off codes

7.5 Setting mode user level (X. □□)

Code	Description	Setting range	Preset
1.	Flow temperature setpoint	20 - 90 °C	80
2.	Pump run on setting	00 = pump run on 10 seconds 01 - 15 = pump run on in minutes 99 = continuous pump operation	03
A.	Boiler control setting	Control mode (modulating-on/off-etc.)	31

Table 06 Settings mode user level

⚠ Changing 2. and A. should only be on design engineers advice.

7.5.1 Flow temperature setpoint (1.)

The required flow temperature is adjustable from 20 to 90ºC (factory setting 80°C).
The following diagram shows a typical example of this procedure:

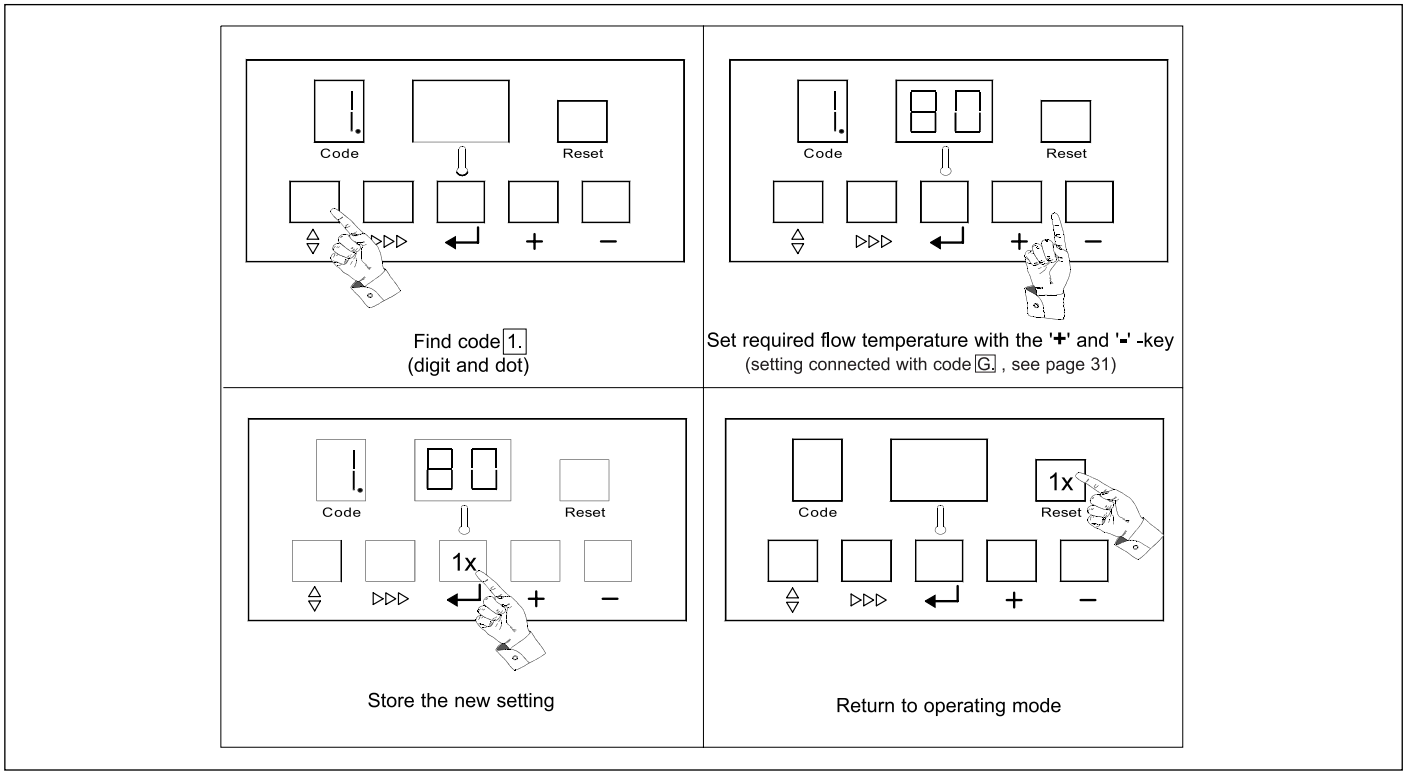

Fig. 05 Adjusting maximum flow temperature

7.5.2 Pump run on time (2.)

Pump run on time can be adjusted (Please refer to installation contractor).

- Press the ⇕-key until the digit 1. (with dot) appears in the **code**-display.
- Press the ▷▷▷-key until the digit 2. (with dot) appears in the **code**-display.
- Set the required value, using the [**+**]- and [**-**]-keys.
- Press the ↵-key to store the new value (value will flash twice).
- Press the **reset**-key to return to operating mode.

Code	🌡	Description
2.	0 0	Pump runs on for 10 seconds
2.	X X	Pump runs on for 1 to 15 minutes (X X = 0 1 to 1 5)
2.	9 9	Continuous pump operation

Table 07 Adjustments pump run on time

7.5.3 Boiler control setting (A.)

The boiler is factory set to option 31 (On/Off-modulation with heating On).

To change the control option:

- Press the ⇕-key until the digit 1. (with dot) appears in the **code**-display.
- Press the ▷▷▷-key until the digit A. (with dot) appears in the **code**-display.
- Set the required value, using the [**+**]- and [**-**]-keys.
- Press the ↵-key to store the new value (value will flash twice).
- Press the **reset**-key to return to operating mode.

Code	🌡	Description	
A.	X 0	Heat demand off	X = 1, 2, 3, 4 or 5
	X 1	Heat demand on	X = 1, 2, 3, 4 or 5
	1 Y	On/off, modulating on flow temperature with booster function	Y = 0 or 1
	2 Y	High/low, modulating on flow temperature	Y = 0 or 1
	3 Y	On/off, modulating on flow temperature without booster function	Y = 0 or 1
	4 Y	Analog signal 0-10V on temperature	Y = 0 or 1
	5 Y	Analog signal 0-10V on output %	Y = 0 of 1

Table 08 Boiler control setting

Note : Booster function n/a

7.6 Setting mode service level (only for the qualified service engineer) (X. □□)

To prevent accidental, unauthorised access by non-qualified persons the control system requires an input code to gain access to the second level of boiler control.

- Press the ⇕- and ▷▷▷-keys simultaneously and hold. The **code**-display now shows a letter C. with a random number in the 🌡-display.

- While holding both keys pressed, set the ⓘ-display to 12, using the [+]- or [-]-keys and press the ↵-key.
- The display will flash twice, confirming acceptance of the access code.
- Release the keys and C12 will disappear from the display.

You are now in the service mode.

⚠ **WARNING: changing the pre-set values without reference to the tables contained in this manual may result in incorrect boiler operation.**

- The service settings can now be reached by pressing the ⇕-key until the digit 1. (with dot) appears in the **code**-display. Set the required value, using the ▹▹▹-key.
- To delete the service code, press the **reset**-key once.
- If no keys are pressed over a 15-minute period the service code will delete automatically.

Code	Description	Setting range	Pre-set
4.	Low fire start point, *par. 7.6.1*	00 - 0.0 (=100) (% output)	50
5.	Boiler output to indicate high fire, par. 7.6.2	00 - 0.0 (=100) (%)	90
6.	Maximum output, *par. 7.6.3*	50 - 0.0 (=100) (%)	0.0 (=100)
7.	Forced part load, *par. 7.6.4*	10 - 50 (% output)	30
8.	Forced part load running time, *par. 7.6.4*	00 - 30 (x 10 sec.)	02 (80 kW) and 01 (120 kW, 160 and 200 kW)
9.	Cycling prevention delay-time, *par. 7.6.5*	00 - 30 (x 10 sec.)	02 (=20 s.)
A.	Start point for 0 Volt analog signal, *par. 7.6.6*	50. (=-50) - 50 (°C)	00
b.	End point for 10 Volt analog signal, *par. 7.6.6*	50 - 9.9. (=299) (°C)	0.0 (=100)
C.	n/a, *par. 7.6.7*	10 - 0.0 (=100) (%)	0.0 (=100)
d.	n/a, *par. 7.6.7*	10 - 0.0 (=100) (%)	30
E.	Δt from control stop point to start point, *par. 7.6.8*	05 - 20 (°C)	10
F.	Maximum flue gas temperature, par. *7.6.9*	80 - 2.0 (=120) (°C)	2.0 (=120)
G.	High limit temperature setpoint, *par. 7.6.10*	90 - 1.0 (=110) (°C)	1.0 (=110)
H.	Modulation start point ΔT, *par. 7.6.11*	10 - 30 (°C)	25
I.	Minimum water pressure, *par. 7.6.12*	00 - 60 (x 0,1 bar)	08 (=0,8)
J.	Adjustments options/accessories, *par. 7.6.13*	00 - 15 (see *Table 10*)	00
L.	n/a, base point internal compensation slope, *par. 7.6.14*	15 - 60 (°C)	20
P.	Boiler type, factory set, for reference only, *par. 7.6.15*	Gas 210 ECO, 80 kW : 10 Gas 210 ECO, 120 kW : 20 Gas 210 ECO, 160 kW : 30 Gas 210 ECO, 200 kW : 40	Dependent of boiler type

Table 09 Settings service level

7.6.1 Low fire start point (4.)

Adjustable from 0 to 100%, factory setting 50%.
The value relates to the low fire output setpoint in percent of total.

⚠ Only active when boiler control option 21 is chosen: high/low, modulating on flow temperature, see *par. 7.5.3.*

7.6.2 Boiler output to indicate high fire (5.)
Adjustable from 0 to 100%, factory setting 90%.
This value sets the point (in %) which indicates the boiler is at high fire.

⚠ Only active when optional Volt free module No. 2 is fitted.

7.6.3 Maximum output (6)
Adjustable from 50 to 100% output, factory setting 100%.
This value sets the maximum output of the boiler.

7.6.4 Forced part load and running time (7. en 8.)
Forced part load, parameter 7., adjustable from 10 to 50% input, factory setting 30%.
This value will force the boiler to always start at this percentage i.e. 30%.

Forced part load running time, parameter 8., adjustable from 0 - 300 sec., factory setting 20 sec. for the 80 kW boilers and 10 sec. for the 120 and 160 kW boilers.
This value sets the time the boiler stays on forced start level i.e. 20 sec.

⚠ If both values are set to 0 or if the time period expires the boiler will revert to what ever the system is demanding.

7.6.5 Cycling prevention delay-time (9.)
Adjustable from 0 and 300 sec., factory setting 20 sec.
This value sets a minimum off time following a control stop / end of a heat demand to prevent cycling taking place. When after this delay time flow temperature lies less than 5°C above return temperature (check on water flow), the boiler will restart.

7.6.6 Start and end point for analog signal (a. and b.)
Start point (0 Volt): parameter a., adjustable between -50°C and +50°C, factory setting 0°C.
This value sets the required flow temperature at 0 volt signal input (restricted by the min IMS setpoint).

End point (10 Volt), parameter b., adjustable between +51°C and +299°C, factory setting 100°C.
This value sets the required flow temperature at 10 volt signal input (restricted by the maximum flow temperature setpoint and the maximum output).

⚠ These settings are only applicable when parameter 41 is chosen for the boiler control operation.

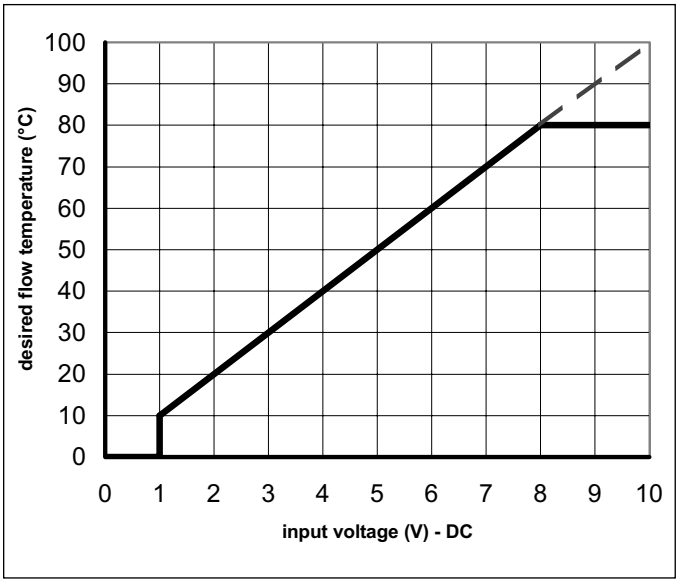

Fig. 06 Temperature control via analog (0-10 Volt) signal

7.6.7 PWM pump position (C. and d.)
n/a to UK.

7.6.8 ΔT from control stop point to start point (E.)
Adjustable from 5 to 20°C, factory setting 10°C.
This value sets the flow temperature at which the boiler will cut back in after a control stop.
The boiler will always go to a control stop when the flow temperature equals the flow setpoint temperature + 5°C.
Cut back in temperature = flow setpoint (80) + 5 - parameter E. (10), i.e. 80 + 5 - 10 = 75°C.

7.6.9 Maximum flue gas temperature (F.)
Adjustable from 80 to 120°C, factory setting 120°C.
This value sets the maximum operating flue gas temperature - for use with PVC flue systems.

7.6.10 High limit temperature setpoint (G.)
Adjustable from 90 to 110°C, factory setting 110°C.
This value sets the high limit temperature at which the boiler will shutdown in a lockout condition requiring manual intervention.

⚠ If the factory setting is reduced, a corresponding reduction in flow setpoint will be required otherwise the min flow rate may be effected.

7.6.11 Modulation start point ΔT (H.)
Adjustable from 10 to 30°C, factory setting 25°C.
This value sets the flow/return ΔT point at which the control modulation begins. The factory set point should be correct for most installations.

⚠ ***Important!!*** The boiler starts to modulate at the setpoint and will be at minimum output if the ΔT* continues to rise to 45°C. At 45°C the boiler will shut down (shut-off code b 3 0). For installations with low flow rates the starting point modulation can be brought forward (i.e. 15°C), closer matching boiler output to system demand.

* ΔT is the temperature difference between flow and return when $T_{flow} > T_{boilerblock}$;
ΔT is the temperature difference between boilerblock and return when $T_{boilerblock} > T_{flow}$.

7.6.12 Minimum water pressure (1.)
Adjustable from 0 to 6 bar, factory setting: 0.8 bar.
This value sets the point at which the boiler will shut-down if the system pressure falls below it. The boiler will resume normal operation when pressure is restored.

⚠ ***Important!!*** Only active when optional water pressure sensor is fitted (the sensor is only suitable for system pressures up to 4 bar).

7.6.13 Adjustments options/accessories (J.)
Adjustable from 0 to 15, factory setting 0.
This value is only applicable when options as listed are fitted to the boiler.

Options	Value
Water pressure sensor	0 1
Analog output:	
Output (%)	0 0
Temperature (°C)	0 4
Valve leak proving system	0 8
Parameter J.:	

Table 10 Adjustments options/accessories

Examples:
- Factory setting is 0: the analog output will be in %.
- Water pressure sensor (1) and valve leak proving system (8) options are connected: parameter J. is set to (1) + (8) = 0 9.

7.6.14 Base point internal compensation slope (L.)
n/a to UK.

7.6.15 Boiler type (P.)
Factory default should not be changed.
Three possible settings 10, 20 or 30, factory setting dependant on the output.
This value sets the boiler type and output and should only be changed when fitting a replacement control module or after reference to Broag's service department.

7.7 Read-out mode (X. ☐☐)
To check boiler setpoints and values:
Press the ⇕-key until 1. (flashing dot) appears in the **code**-display. Then select the required code 2., 3. or 4. etc. using the ▷▷▷-key.

Code	Description	Read-out range / remarks	Read-out (example)
1.	Flow temperature (°C)	actual value	8 0
2.	Return temperature (°C)	actual value	7 0
3.	Flue gas temperature (°C)	actual value	8 5
4.	Outdoor temperature (°C)	with outside temperature sensor: without outside temperature sensor:	0 5 3 6 (= -36)
5.	Heat exchanger temperature (°C)	actual value	7 5
6.	Flow temperature (setpoint) (°C)	calculated value	8 4
7.	Status heat demand (1st digit) and differential air pressure switch (LD2, 2nd digit)	0 X = no heat demand, 1 X = heat demand X 0 = open, X 1 = closed	1 1 (heat demand / closed)
8.	Open to close time IMS	actual open to close value, 0 0 - 6 0 0 0* (÷50 for seconds)	1 0 0 0 (=1000*)
9.	Requested output (%)	required value by external analog signal (par. A. = 5 Y, see Table 08) 0 0 - 0. 0 (=100)	9 0

A.	Actual output (%)	actual value, 10 - 0.0 (=100)		87
b.	Status of IMS	calculated position, 00 = IMS closed (the LED above the [+]-key is illuminated green) or IMS running 01 = Minimal position IMS 02 = IMS fully open		01
C.	Valve position IMS (%)	actual value, 00 - 0.0 (=100) %		90
d.	Actual water pressure (÷10 for bar)	00 - 60, only with water pressure sensor without water pressure sensor		15 0.0
E.	No function			
F.	Fan speed	Max.	80 kW: 120 kW: 160 kW: 200 kW:	3700* (= 3700) 3400* (= 3400) 4100* (= 4100) 5000* (= 5000)	40 00 (=4000*)
G.	Ionisation level	actual value, 00 = smaller than 2 µA 01 = larger than 2 µA 02 = larger than 3 µA 03 = larger than 4,5 µA 04 = larger than 6 µA			03
H.	Minimum position in open to close time IMS (min. 23%)	actual value, 00 - 9999* (÷100 for %)			10 00 (=1000*)

Table 11 Read-out mode user level

* The displayed value has 4 digits. The display alternately flashes from F. 40 to . 00 with code indicating the value being read. In this example: fan speed 4000 r.p.m.

7.8 Failure mode (X) (service level)

An actual failure is recognizable to a flashing **code**- and -display (see *Table 23*).

⚠ ***Important!!*** In case of a heat-related failure the pump, if connected to the boilers control unit, will keep running.

The latest failure with the accompanying operating codes and relevant temperatures are being stored and can be read out as follows.

Gain access to the service level by entering the service code C 12 (see *par. 7.6*).

Press the ⇕-key until 1 appears in the code-display (digit flashes).

Then select the required code 2, 3 or 4 etc. using the ▹▹▹-key and read off the relevant value.

Code		Description
1	37	Failure code (see *chapter 11*)
2	03	Operating mode during failure (see *par. 7.3*)
3	53	Flow temperature during failure
4	40	Return temperature during failure
5	58	Flue gas temperature during failure
6	67	Position of IMS during failur

Table 12 Failure mode on service level

Example as above:

Failure code 37 (flashing) - indicates the return temperature sensor has failed during operation (03), at a flow temperature of 53°C, a return temperature of 40°C and a flue gas temperature of 58°C, with the IMS system 67% open.

7.9 Counter mode (1, . and .) (service level)

First of all gain access to the service level by entering the service code C 12 (see *par. 7.6*).

7.9.1 Hours Run

Press the ⇕-key until the **code**-display shows successively 1, , and . This will alternate with three sets of two digits displaying the number of hours as table.

Code	Description	e.g. 14403 hours
1	Hours run in hundred thousands and ten thousands	01
	Hours run in thousands and hundreds	44
	Hours run in tens and units	03

Table 13 Hours run meter

7.9.2 Successful ignition attempts

To read the number of successful ignition attempts. Press ▷▷▷-key once **code**-display changes to 2, , and . This will alternate with three sets of two digits displaying the number of successful ignition attempts as table.

Code	Description	e.g. 8765 attempts
2	Successfull ignition attempts in hundred thousands and ten thousands	00
	Successfull ignition attempts in thousands and hundreds	87
	Successfull ignition attempts in tens and units	65

Table 14 Meter successful ignition attempts

7.9.3 Total start attempts

To read the total number of starts attempts. Press ▷▷▷-key once **code**-display changes to 3, , and . This will alternate with three sets of two digits displaying the number of start attempts as table.

Code	Description	e.g. 8766 attempts
3	Total start attempts in hundred thousands and ten thousands	00
	Total start attempts in thousands and hundreds	87
	Total start attempts in tens and units	66

Table 15 Meter total number of starts attempts

8 INSTALLATION INSTRUCTIONS

8.1 General

All gas appliances must, by law, be installed by competent persons (e.g. Corgi). Failure to install appliances correctly could lead to prosecution.
It is in your own interest and that of safety to ensure that the law is complied with.

The following instructions must be adhered to when the Remeha Gas 210 ECO is installed:
- Gas Safety (Installation and Use) Regulations 1984 (as amended).

In addition to the above regulations, this boiler must be installed in compliance with:
- Current I.E.E. Regulations for electrical installations
- Local building regulations
- The Building Standards (Scotland)
- (Consolidation) Regulations
- by-laws of the local water undertaking
- Health and Safety Document No 635 'The Electricity at Work Regulations 1989'.

It should also be in accordance with the relevant recommendations in the current edition of the following British Standards and Codes of Practice, viz. BS 6644, BS 5978 Part 1 & 2, BS 5449, BS 5446, BS 6798, BS 6891 and BG DM2.

⚠ **Important:** The Remeha Gas 210 ECO is a CE certified boiler and must not be modified or installed in any way contrary to these "Installation and Maintenance Instructions".
Manufacturers Instructions must NOT be taken as overriding statutory obligations.

8.2 Delivery, positioning and support surface

The Remeha Gas 210 ECO is supplied as standard fully assembled, plastic wrapped, crated on a pallet (70x120 cm), which can be easily moved with a pallet or hand truck. The standard package will pass easily through all standard doorways (min. 745 mm).
Within the crate there is a Polystyrene protective cap which contains the boiler documentation, boiler support strips and accessories when supplied.

The Remeha Gas 210 ECO boiler should be positioned as follows:
- Place the pallet c/w boiler in the plant room adjacent to final location.
- Remove straps, crate, top and sides and all other packaging.
- Slide the boiler assembly off the pallet, making use of the molded 'hand holdes' in the drain pan base, taking care to lift clear of the retaining blocks.
- Slide the boiler assembly into its final position.
- Locate the support strips (in Poly Styrene cap), place the three strips in the locating slots in the base of the drain pan (across the boiler, see *Fig. 03*, front view).
- Remove the front casing to gain access to the levelling bolts in the base of the drain pan.
- Level the boiler using a spirit level on the top of the drain pan.
- Replace the front casing and using the Poly Styrene caps and plastic sheeting cover boiler to protect from dust and dirt, etc.

The following minimum clearances are recommended:
Front: 600 mm.
Top: 400 mm.
Left side: 50 mm.
Right side: 250 mm.

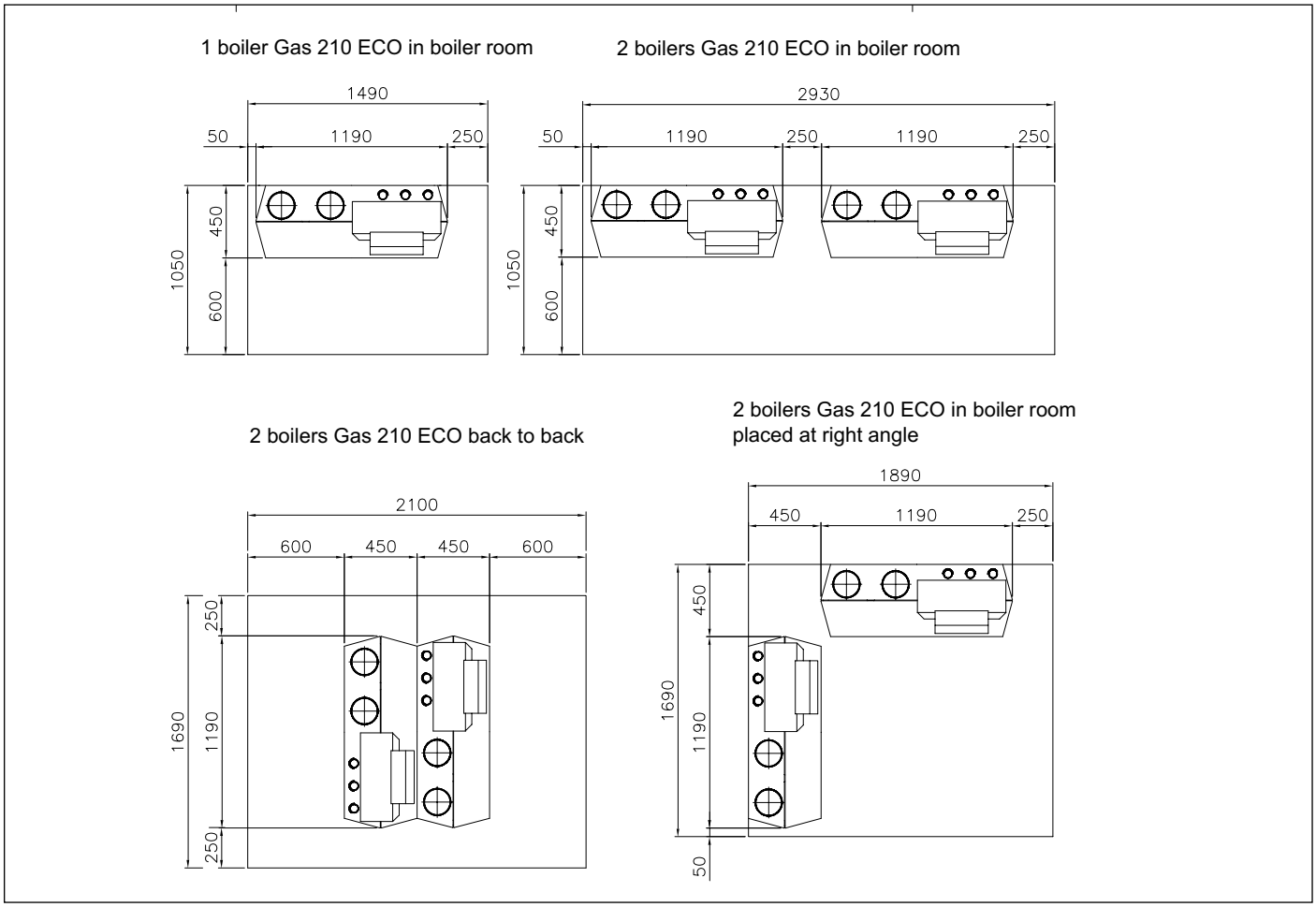

Fig. 07 Positioning possibilities in the boiler room

The following drawing represents the support surface of the boiler.

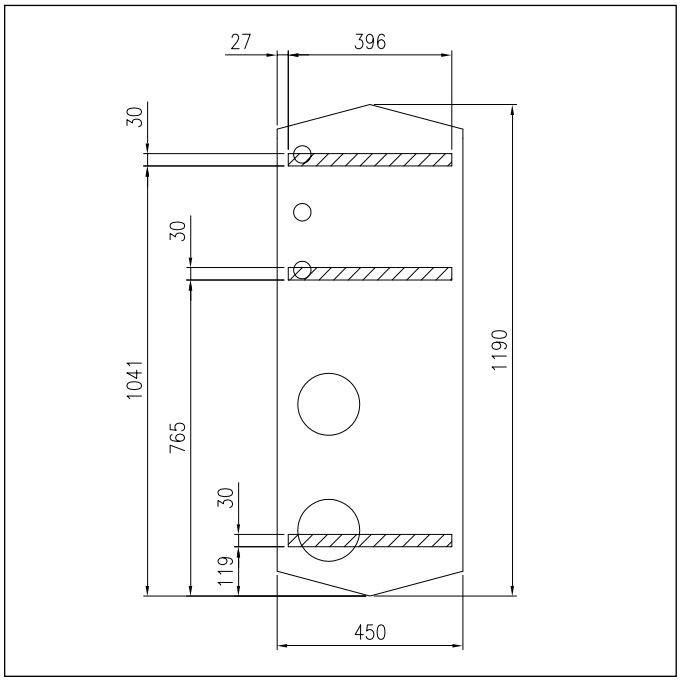

Fig. 08 Support surface Remeha Gas 210 ECO

8.3 Flue gas discharge and air supply

8.3.1 General

The Remeha Gas 210 ECO is suitable for conventional room ventilated or room sealed operation. Specify at the time of ordering if the boiler is to be supplied for room sealed operation. In that case, the boiler will be supplied with a purpose-designed room sealed terminal, air supply connection and some accessories. The air supply connection should rest on the heat exchanger underneath the boiler casing after removing the standard perforated air inlet cover.
Horizontal components in the flue gas discharge system should slope towards the boiler.
Horizontal components in the air supply system should slope towards the supply opening.
Room sealed terminals should comply with the Gastec QA-requirements for both horizontal and vertical outlet constructions.
Care should be taken when siting flue exit positions as a vapour plume will be visible when the boiler is operational (flue gas temperature will be less than 75°C resulting in the water vapour condensing out on contact with the air).

8.3.2 Classification due to discharging flue gases

Classification according to CE:
Type B23: Conventional room ventilated appliance without draft diverter. Air supply from boiler room; flue gas discharge on roof.
Type C33: Room sealed appliance, connected to combined roof outlet.
Type C43: Room sealed appliance in cascade configuration, connected via two ducts to a common duct system serving more than one appliance.
Type C53: Room sealed appliance, connected to separate ducts for the air supply and flue gas discharge, terminated in zones of different pressure.
Type C63: Room sealed appliance, supplied without the terminal or the air supply and flue gas discharge ducts.

Conventional open flue installation:
Combustion air for the boiler must be provided to the room/compartment in accordance with BS 6644.
For maximum flue length see table in *par. 8.3.4.*

Room sealed installations:
It is unnecessary to provide separate combustion air to the room/compartment as this is supplied direct to the boiler via the eccentric system and the room sealed horizontal (min discharge height of 5M) or vertical terminal unit.

Additional ventilation will be required to the room/compartment in accordance with BS 6644 (compartment ventilation). For maximum flue/air inlet length see table in *par. 8.3.5.*

For installations where supply and discharge points are in two different pressure zones CLV system please contact Broag Technical Dept. for further details and advice. See also *par. 8.3.6.*

⚠ **Note**: the boilers can be installed on a flue dilution system, but must have a total flue break to avoid boiler controls being affected by the flue dilution fan pressures. For full details please contact Broag.

8.3.3 Material and installation

Flue gas discharge:
Material:
Rigid single walled : stainless steel (316), aluminium or plastic (to comply with building regulations).
Flexible : stainless steel (316).
Construction : all joints and seams should be gastight and watertight with the horizontal runs graded towards the boiler (min. discharge 5 cm per meter) to allow condensate free drainage to the boiler.
Flue gas discharges longer than 2 meters must be supported independently and may not rest on the boiler.
The flue outlet should terminate with reduction cone and bird guard only (chinamans hat or GLC type terminals etc. should not be used).

Air supply:
Material:
Single walled, rigid or flexible: aluminium, stainless steel and plastic (to comply with building regulations).
Air supply ducts longer than 2 meters must be supported independently and may not rest on the boiler air inlet. Care must be taken to ensure that if water is able to enter the duct it will run away from the boiler air inlet connection.

8.3.4 Single boiler conventional flue

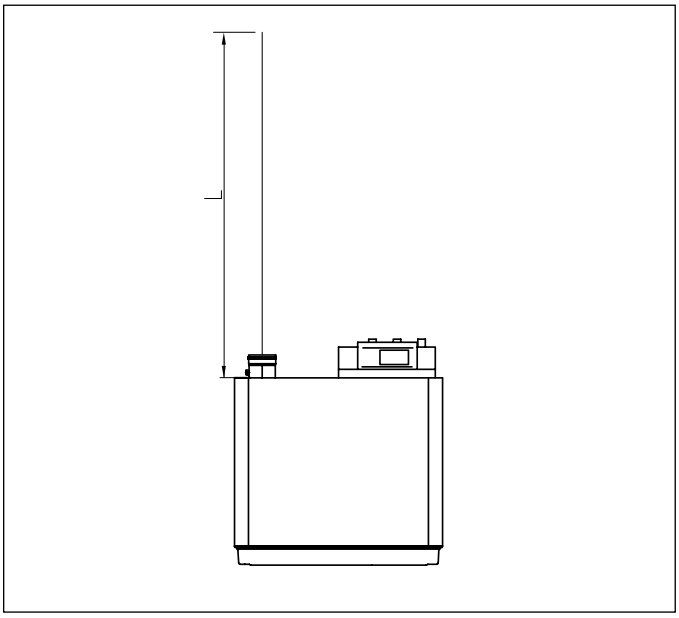

Fig. 09 Flue gas discharge duct without bends, single boiler, conventional flue.

Flue diameter		150 mm			
Model Gas 210 ECO		80 kW 3 sections	120 kW 4 sections	160 kW 5 sections	200 kW 6 sections
max eq. length L	m	160	70	37	33
eq. length bend 45°, R=D	m	1.2			
eq. length bend 90°, R=D	m	2.1			

Table 16 Calculation data conventional flue

Example: Gas 210 ECO, 160 kW - 5 sections, total length 15 m, 2 bends 90°.
15 m + 2 x 2.1 = 19.2 < 37 m → flue OK.

⚠ **If the design parameters are outside the values shown in the above table or there is any doubt over the flue system, please contact our technical department for calculation to be undertaken.**

8.3.5 Single boiler, room sealed flue

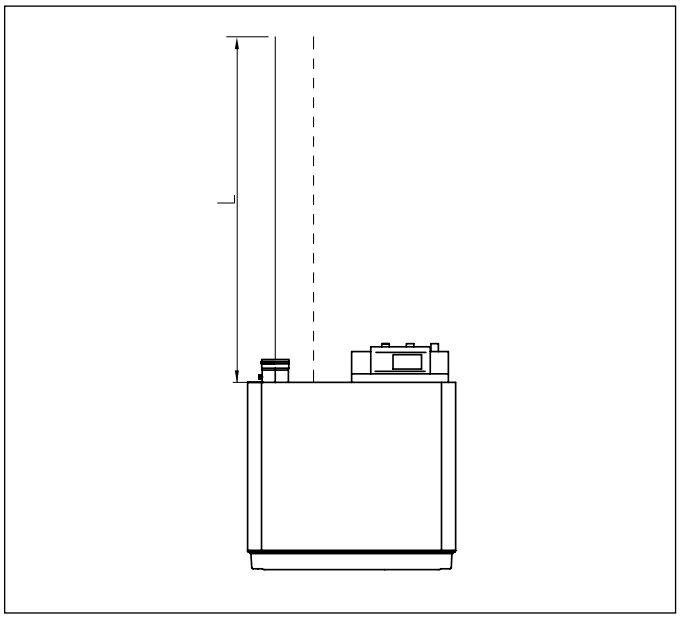

Fig. 10 Flue gas discharge duct without bends, single boiler, room sealed application.

Flue/air inlet diameter		150/150 mm			
Model Gas 210 ECO		80 kW 3 sections	120 kW 4 sections	160 kW 5 sections	200 kW 6 sections
max eq. length L	m	82	33	16	14
eq. length bend 45°, R=D	m	1.2			
eq. length bend 90°, R=D	m	2.1			

Table 17 Calculation data room sealed applications

Example: Gas 210 ECO, 120 kW - 4 sections, total length flue 25 m, 2 bends 90°.
25 m + 2 x 2.1 = 29.2 < 33 m → flue OK.

⚠ **If the design parameters are outside the values shown in the above table or there is any doubt over the flue system, please contact our technical department for calculation to be undertaken.**

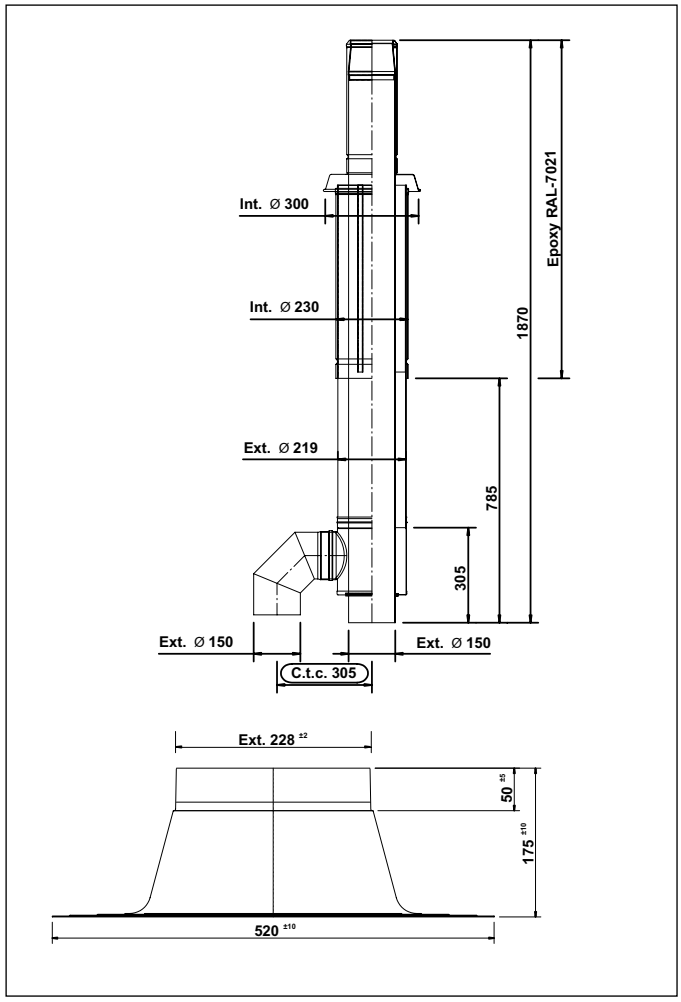

Fig. 11 Vertical terminal for room sealed operation

8.3.6 Different pressure zones

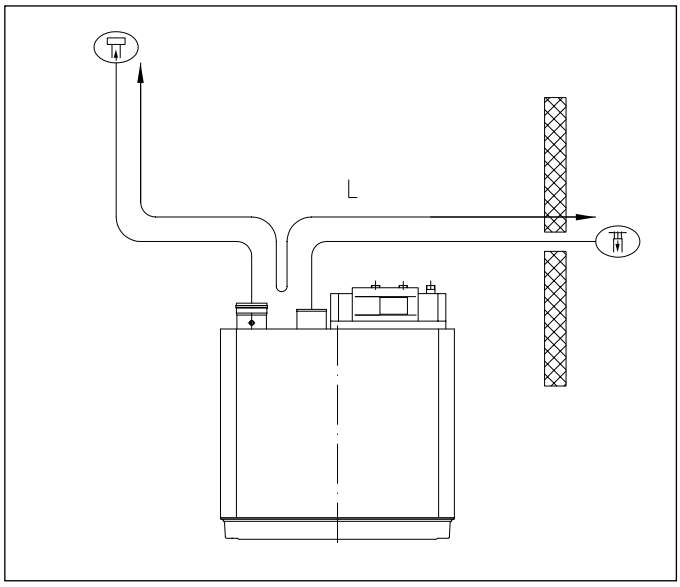

Fig. 12 Different pressure zones

The Remeha Gas 210 ECO boilers are capable of operating with the air inlet and flue outlet in different pressure zones (CLV System). The max height difference between air inlet and flue gas outlet is 36 meters and the maximum total length of air inlet and flue gas outlet pipe work L is shown in *Table 18*.

Flue/air inlet diameter		**150/150 mm**			
Model Gas 210 ECO		80 kW 3 sections	120 kW 4 sections	160 kW 5 sections	200 kW 6 sections
maximum total length of air inlet and flue gas outlet pipework L	m	112	42	18	14
eq. length bend 45°, R=D	m	1.2			
eq. length bend 90°, R=D	m	2.1			

Table 18 Different pressure zones

Note: this system may not be used in areas with adverse wind conditions (i.e. in some coastal regions).

⚠ **If the design parameters are outside the values shown in the above table or there is any doubt over the flue system, please contact our technical department for calculation to be undertaken.**

8.3.7 Cascade flue systems

For multiple boiler installations with common flue systems please refer to Broag for advice.

8.4 Installation details

8.4.1 Condensate discharge

Discharge the condensate via a tundish, directly into a drain. Only use synthetic material for the connecting piping, because of the acidity (pH 2 - 5) and allow a min. of 30 mm per M to ensure a good flow rate. Fill the siphon with water before firing the boiler. It is not advisable to discharge into an outside gutter, because of the risk of freezing.

8.4.2 Water treatment

The system should be filled with mains cold water (for the UK this will usually have a pH of between 7 and 8). Pressurised installations with a boiler/system content ratio of 1:10 or less should not require water treatment, provided that the following conditions apply:

1. The system is flushed thoroughly to remove all fluxes and debris and filled completely once.
2. Make up water is limited to 5% per annum.
3. The hardness of the water does not exceed 360 ppm (20°D).

All scale deposits will reduce the efficiency of the boiler and should be prevented. However provided the above is complied with any scale produced will not be too detrimental to the boiler efficiency and will not reduce the anticipated life expectancy of the boiler.

⚠ Scale deposits in excess of 5mm will reduce boiler efficiency and increase the risk of premature casting failure.

As most systems contain a variety of metals it is considered good practice to provide some form of water treatment (especially in open vented systems) in order to prevent or reduce the following.
- Metallic corrosion
- Formation of scale and sludge
- Microbiological contamination
- Chemical changes in the untreated system water.

Suitable chemicals and their use should be discussed with a specialist water treatment company prior to carrying out any work. The specification of the system and manufacturers recommendations must be taken into account, along with the age and condition of the system. New systems should be flushed thoroughly to remove all traces of flux, debris, grease and metal swarf generated during installation. Care to be taken with old systems to ensure any black metallic iron oxide sludge and other corrosive residues are removed, again by thoroughly flushing, ensuring that the system is drained completely from all low points.

⚠ **NOTE:** Please ensure that the new boiler plant is not in circuit when the flushing takes place, especially if cleansing chemicals are used to assist the process.

Under no circumstances is the boiler to be operated with cleaning chemicals in the system.

To summarise:
- Minimise water loss
- Prevent pumping over in open vented systems
- Provide adequate air venting at all high points
- Maximum chlorine content of 200 mg/1

Take advice on the suitability of inhibitors for use with aluminium boilers
MAX pH of 8.5 when using additives (max. pH of 9 without additives)

If water treatment is used, we recommend the following products:

‘Copal’ manufactured by:

Fernox Manufacturing Company Ltd.
Britannia Works
Clavering
Essex, CB1L 4QZ
Tel No: 0179 955 0811
Fax No: 0179 955 0853

or:

Sentinal ‘X100’ manufactured by:

BetzDearborn Ltd
Sentinal
Foundry Lane
Widnes
Cheshire WA8 8UD
Tel No: 0151 424 5351
Fax No: 0151 420 5447.

For the correct dosage and for further information on water treatment or system cleaning we advise direct contact with either of the above companies.

8.4.3 Safety valve
A safety valve should be fitted in accordance with BS 6644.
Recommended minimum size of 28mm (full-bore type).

8.4.4 Water circulation
Provided that the factory pre-set high limit and flow temperatures are not altered and the Remeha modulating controls are used no minimum flow rate is required as the '***abc***®' system will monitor these conditions and reduce the boiler output, finally shutting down until flow conditions improve.

8.5 Multiple installation
With more than one Remeha Gas 210 ECO boiler a cascade configuration can be made (see example in *Fig. 13*). The table below shows the minimum dimensions of the pipe work connections and low loss header (see *Table 19*) based on a design ΔT of 20º C. Please note pipe work header and pumps not Broag supply.

1. ***rematic***® modulating cascade control
2. pump
3. safety valve
5. non return valve
6. expansion vessel
7. hand cock
8. automatic air vent
9. low loss header (type shown is not supplied by Broag, see *Table 19)*
10. drain cock
11. installation pump
12. expansion vessel installation
13. flow temperature sensor
14. outdoor temperature sensor

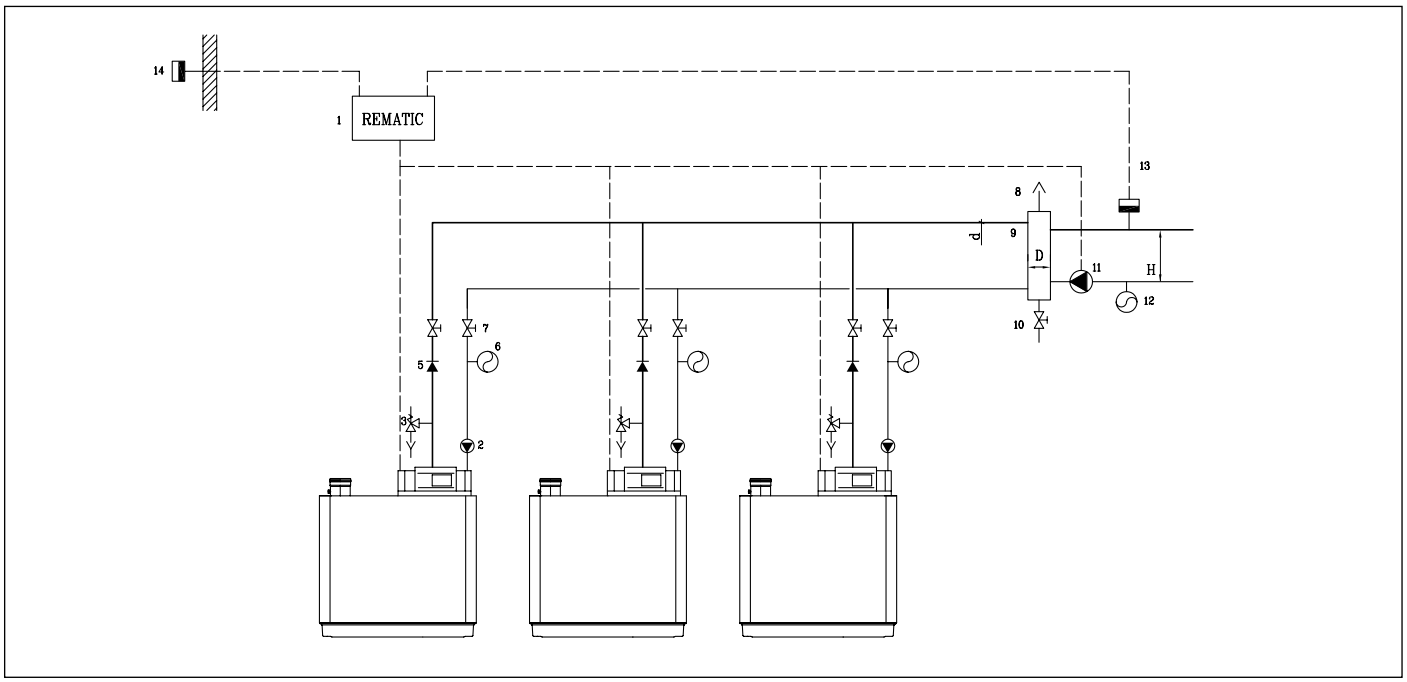

Fig. 13 Example hydraulic plan cascade configuration
04.21H.HS.00003

Table 19 represents the minimal dimensions of low loss header and various pipes, based on a ΔT of 20°C. The Remeha Gas 210 ECO has no built-in pump.

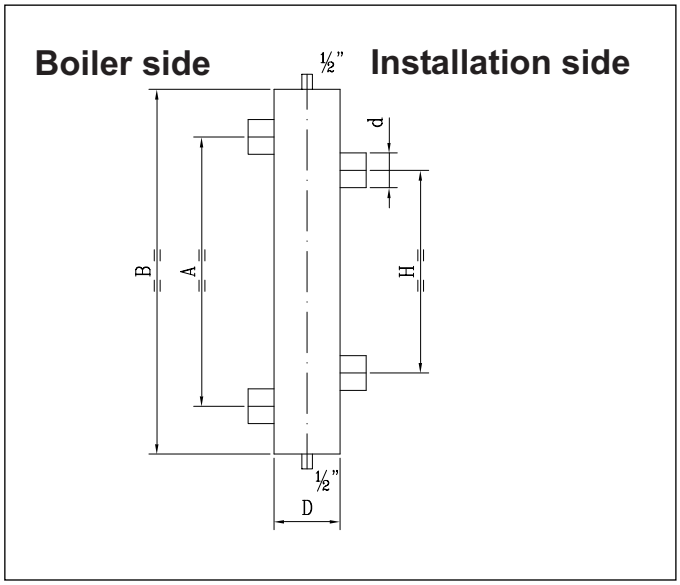

Fig. 14 Low loss header

Output	Flow Q	d int.	D ∅ or D square		H	A	B
kW	m^3/h	inch	inch	mm	mm	mm	mm
80	3,4	1¼	3 (DN80)	70	280	370	510
120	5,2	2	4 (DN 100)	90	350	465	630
160	6,9	2	4 (DN 100)	100	350	465	630
200	8,6	2½	5 (DN 125)	110	440	580	770
240	10,3	2½	5 (DN 125)	120	440	580	770
280	12,0	2½	6 (DN 150)	130	440	580	770
320	13,8	2½	6 (DN 150)	140	440	580	770
360	15,5	2½	6 (DN 150)	150	440	580	770
400	17,2	2½	8 (DN 200)	160	440	580	770
440	18,9	3	8 (DN 200)	170	540	720	900
480	20,6	3	8 (DN 200)	170	540	720	900
520	22,4	3	8 (DN 200)	180	540	720	900
560	24,1	3	8 (DN 200)	190	540	720	900
600	25,8	3	8 (DN 200)	190	540	720	900
640	27,5	3	10 (DN 250)	200	540	720	900

Table 19 Dimensions low loss header, based on a ΔT of 20°C

Note: the low loss header has to be sized for the maximal flow on the system side.

9 ELECTRICAL INSTALLATION

9.1 General
The Remeha Gas 210 ECO is supplied as standard with electronic operating and flame ionisation safety controls with a specially designed microprocessor at the heart of the system. The boiler is pre-wired as shown in the wiring diagram in *par. 9.3*. All external controls can be connected on one terminal strip.

9.2 Electrical specifications

9.2.1 Power supply
The boiler is suitable for a supply of 230V-1-50Hz with phase/neutral/earth.

⚠ the controls are phase / neutral sensitive.

9.2.2 Automatic Controls

Manufacturer	: Gasmodul
Type	: MCBA 1463 D
Electrical supply	: 230V -1-50 Hz
Power consumption at standby/part load/full load	
- 3 sections	: 12 / 68 / 92 W
- 4 sections	: 12 / 58 / 84 W
- 5 sections	: 12 / 69 / 110 W
- 6 sections	: 14 / 75 / 160 W
Maximum power output to pump	: 200 VA.

9.2.3 Fuse specification
The boiler is protected by fuses:
- On the Gasmodul control box:

F1 rated at 2 amps (fast acting) - control circuit 230 Volt
F2 not present
F3 rated at 4 amps (slow acting) - control circuit 24 Volt.

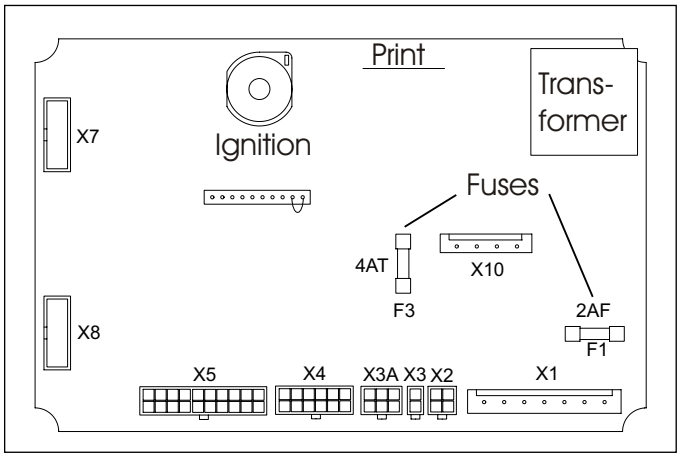

Fig. 15 Control box

- On the 230 Volt-terminal strip (X27, see *Fig. 16*):

Fa rated at 3.15 amps (slow acting) - fan protection
Fb rated at 6.3 amps (slow acting) - use external control.

9.2.4 Boiler temperature control
The Remeha Gas 210 ECO has electronic temperature control with flow, return, heat exchanger and flue gas temperature sensors. The flow and flue gas temperature sensors can be adjusted to suit system conditions, see *Table 06 and Table 09.*

9.2.5 Low water protection (flow and content)
Provided by monitoring the temperature sensors in the boiler.
The Remeha Gas 210 ECO is supplied with a low water protection on the basis of temperature measurement. By modulating back at the moment that the water flow threatens to fall too low, the boiler is kept operating for as long as possible. In the event of low flow (ΔT^* > 45°C), the boiler will shutdown and not lockout.
If the boiler is fired dry, it will go to high temperature lockout, failure code 18.

*ΔT is the temperature difference between flow and return when $T_{flow} > T_{boilerblock}$;
ΔT is the temperature difference between boilerblock and return when $T_{boilerblock} > T_{flow}$.

9.2.6 High limit protection
The high limit temperature protection device switches off and locks out the boiler when the flow temperature exceeds the high limit setpoint (adjustable). When the fault is corrected, the boiler can be restarted by using the **reset**-key on the control panel.

9.2.7 Differential air pressure switch (LD2)
On heat demand the control system sets the IMS-system to fully open, at this point an internal check is made on the differential air pressure switch (LD2). If LD2 contacts are open (confirming no air), the fan switches on. After a set time period the IMS closes to the control position, air pressure differential over the IMS-system increases causing the LD2 switch to close (confirming air supply is efficient to continue).
The IMS-system moves to its pre-set start position and ignition sequence begins.
Note: LD2 switch is no longer monitored (due to modulation) until a new start command.

9.3 Electrical connections
These are accessed by removing the black plastic cover from the instrument panel, exposing the terminal strip and electronic components that make up the boiler controls. All external connections (power and control) are made on this terminal strip, as detailed in the following section, *Fig. 14*.

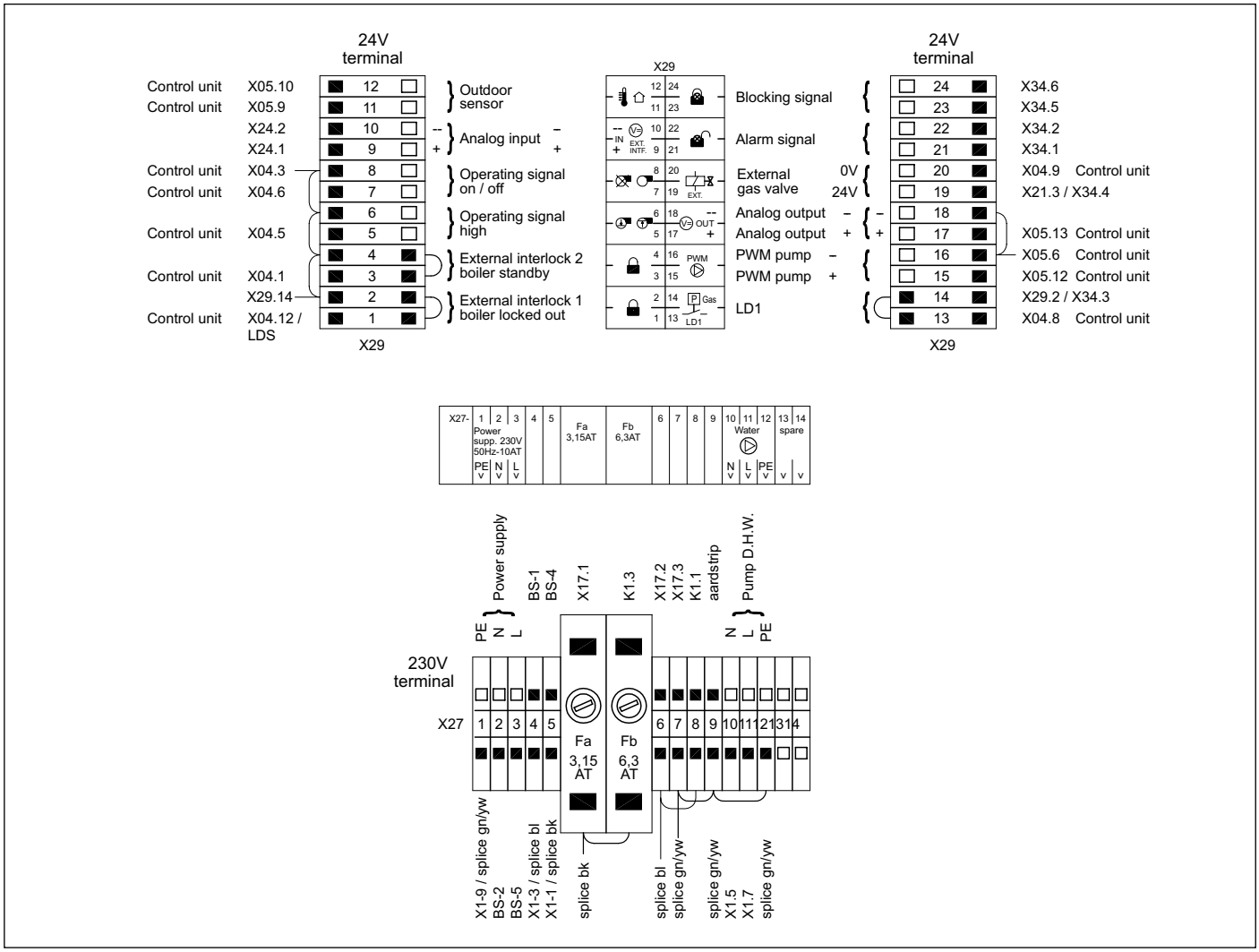

Fig. 16 Terminal strip

04.21H.79.00002

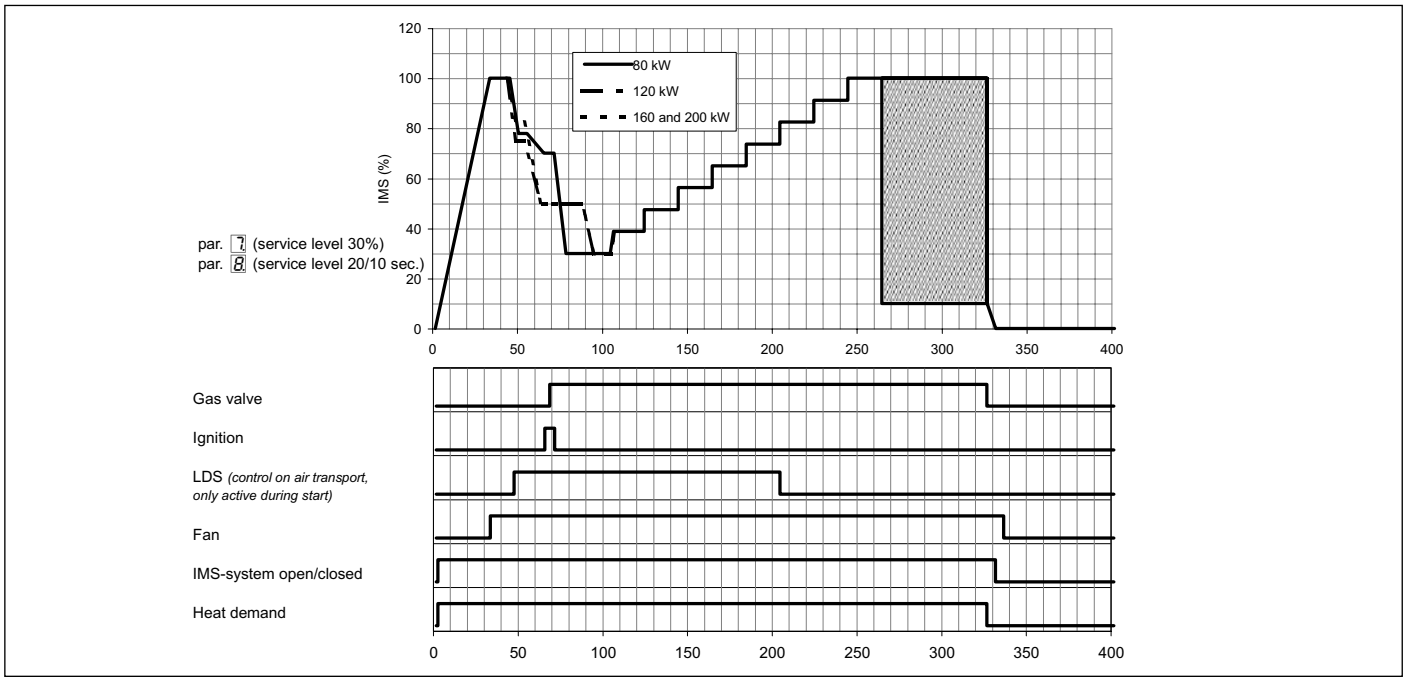

Fig. 17 Switch sequence diagram at nominal flow

9.4 Boiler control

The Remeha Gas 210 ECO can be controlled using one of the following methods:

1. Modulating (two wire control)
To make full use of the boiler's modulating feature, a ***rematic***® control has to be connected. This control will provide optimised time and weather compensation to achieve maximum efficiency and minimum boiler cycling whilst maintaining design condition within the building. This applies to both single and multiple boiler installations (up to a max of 8), under the dictates of an outside and flow temperature sensor.

- ***rematic***® 2945 C3 K - An optimising / weather-compensated boiler control for multiple boilers. This compensator can regulate the boiler output against outside weather conditions, and provide time and temperature control over the DHW. The compensator is mounted in one of the boilers and is interfaced to communicate with the boiler's controls via the supplied adapter. On site connection of the supplied outside and common flow sensors complete the installation. Set the X value of the boiler control operation parameter A. to 1.

Note: Please refer to the relevant control leaflet for optimising / compensation settings.

2. Analog control (0-10 Volt DC)
The heat output modulates between the minimum and the maximum value on the basis of the voltage supplied by an external analog (0-10V) input. To control the boiler with an analog signal, the signal has to be connected on terminals 9 (+) and 10 (-) of the 24 V-terminal strip (X29) in the instrument panel.

- Temperature based (20 to 90 °C) set the X value of the boiler control operation parameter A. to 4. To set the ratio between voltage and the desired flow temperature, see *par. 7.6.6* and *Fig. 18*.

- Output based - fixed parameters (10 to 100%), see *Fig. 19.*
  0 Volt = boiler off
  1 Volt - 10 Volt = boiler modulates between 10 and 100% on demand.
  Set the X value of the boiler control setting parameter
  A. to 5.
  The minimal and maximal values are restricted by the minimal position of the IMS-system (read-out mode, parameter H) and the maximal adjusted output (setting mode, parameter b).

Specifications analog input
Impedance R_{in} = 66 kΩ The 0-10 V signal must be free from earth and the 0-10 V output drive must have an adequate separation. The 0 V terminal may have no connection with the power supply's neutral.

Input signal (Volt)	Description
0 - 0.5	Boiler off
0.5 - 1.0	Boiler off, pump on
1.0 -10	Boiler output from 10 to 100% or Flow temperature from 10 to 100°C

Table 20 analog input signal

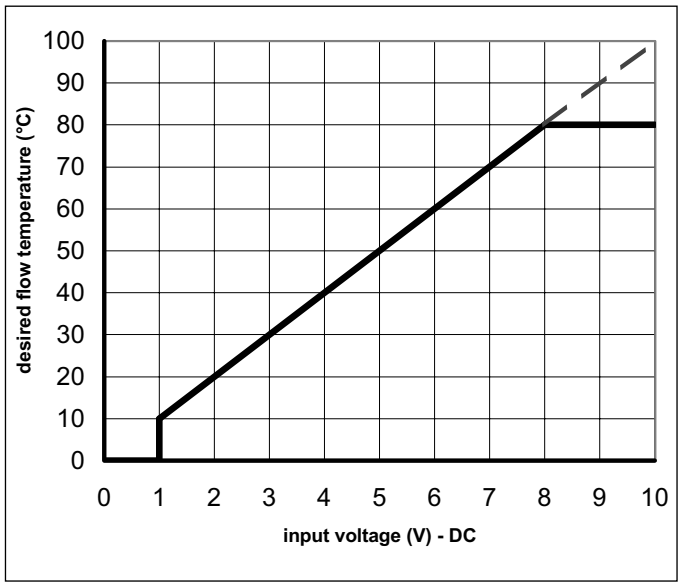

Fig. 18 Temperature control via analog (0-10 Volt) signal

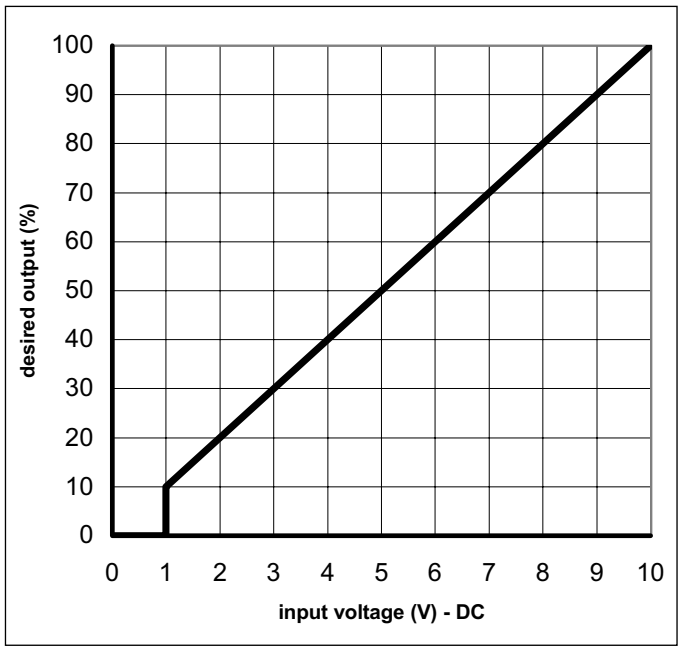

Fig. 19 Output control via analog (0-10 Volt) signal

3. On / off control (1 x no volt switched pair)
The heat output modulates between the minimum and the maximum value based on the set flow temperature, terminal connections 7 and 8 of the 24 V-terminal strip (X29).
Set the X value of the boiler control operation param-

eter A to either 3 (on/off control without booster function) or 1 (on/off control with booster function).

4. High / low control (2 x no volt switched pairs)
The heat output is controlled between part load (50%, adjustable) and full load, by means of a two-stage controller, terminal connections of the 24 V-terminal strip (X29): 7 and 8 low fire - 5 and 6 high fire.
Set the X value of the boiler control operation parameter A to 2. The output percentage on which the boiler runs on low fire, can be adjusted with parameter 4 (low fire start point as percentage) in the setting mode. The 'high fire' percentage is dependent of the maximal adjusted output, see setting mode, parameter 6 (maximum output). During this 'high' state modulation on adjusted flow temperature is released.

In all cases the boiler uses a ΔT dependant output control with the following characteristic: up to a ΔT of 25ºC the boiler runs at full load. Between ΔT 25ºC and ΔT 45ºC the output decreases via a linear line. At Δ 45°C the boiler will shut down (see *Fig. 20).*

This value sets the flow/return ΔT point at which the control modulation begins. The factory set point should be correct for most installations.

⚠ ***Important!!*** The boiler starts to modulate at the setpoint and will be at minimum output if the ΔT continues to rise to 45℃. At Δ 45°C the boiler will shut down (shut-off code b 3 0). For installations with low flow rates the starting point modulation can be lowered (i.e. 15℃), to more closely match the boiler output to the system demand.

*ΔT is the temperature difference between flow and return when $T_{flow} > T_{boilerblock}$;
ΔT is the temperature difference between boilerblock and return when $T_{boilerblock} > T_{flow}$.

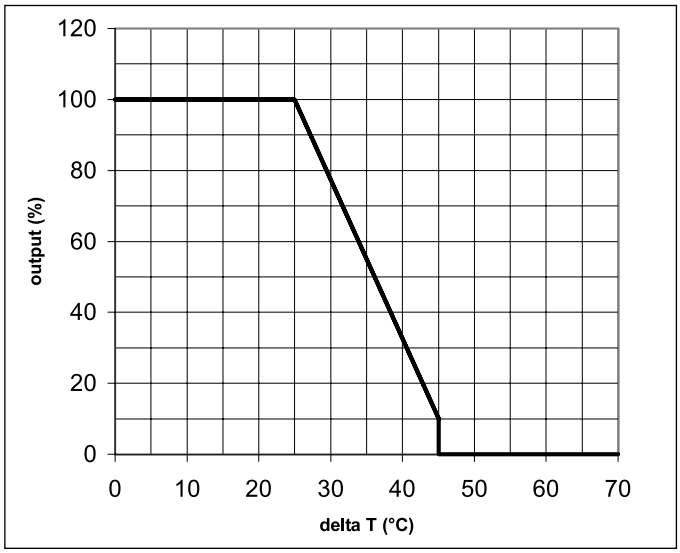

Fig. 20 Characteristic output control

9.5 Safety interlocks

9.5.1 Shutdown interlock
As standard the boiler is supplied with a shutdown interlock carrying a 24 Volt AC boiler control circuit.
Any external devices required to stop the boiler (e.g. limit switches of butterfly valves, minimum gas pressure switches) should be wired in series and connected to terminals 3 and 4 of the 24 V-terminal strip (X29) , breaking the circuit will activate the safety interlock and put the boiler into a shut-off condition with code b 8 8. If this input is being used, the wire bridge must first be removed.

9.5.2 Lockout interlock
As standard the boiler is supplied with a lockout interlock carrying a 24 Volt AC boiler control circuit.
Any external devices required to stop the boiler (e.g. maximum gas pressure switch) should be wired in series and connected to terminals 1 and 2 of the 24 V-terminal strip (X29) , breaking the circuit will activate the safety interlock and put the boiler into a lockout condition, code 1 1 requiring manual intervention to re-set it. If this input is being used, the wire bridge must first be removed.

9.6 Remaining outputs

9.6.1 Analog output
Dependent on the boiler control settings A and accessories fitted (see *par. 7.6.13*) the analog signal can send out the following values:

Output signal (Volt)	Description
0 - 0.5	Boiler off
0.5	Alarm signal
0.5 - 1.0	Boiler off, pump on
1.0 -10	Boiler output from 10 to 100% or Flow temperature from 10 to 100°C

Table 21 Analog output signal

This output is on terminals 17 (+) and 18 (-) of the 24 V-terminal strip (X29).

9.6.2 Indicating module No.1

With this standard module (AM3-2 print) it is possible to report / control the following:

- Common alarm (lockout): the internal Volt free contact across terminals 21 and 22 (n/o) of the 24 V-terminal strip (X29) will change to n/c when the boiler goes to a lockout condition.
- Boiler shut-off mode: the internal Volt free contact across terminals 23 and 24 (n/o) of the 24 V-terminal strip (X29) will change to n/c when the boiler goes to a shutdown condition (with a delay of 50 seconds after start of heat demand; to prevent influencing of an optional the gas valve proving).

⚠ boiler shut-off mode is a special operating condition (see shut-off mode codes, *par. 7.4*).

Maximum power supply : 230 Volt.
Maximum current per contact : 1 A.

- External gas valve control: on heat demand, a 24 Volt signal is provided across terminals 19 and 20 of the 24 V-terminal strip (X29), this power supply can be used to open an external gas valve or indicate to a BMS system that the control voltage is OK. The 24 Volt signal is lost immediately when the boiler gas valve multiblock shuts.

Power supply : 24 Volt AC.
Maximum current : 1 A.

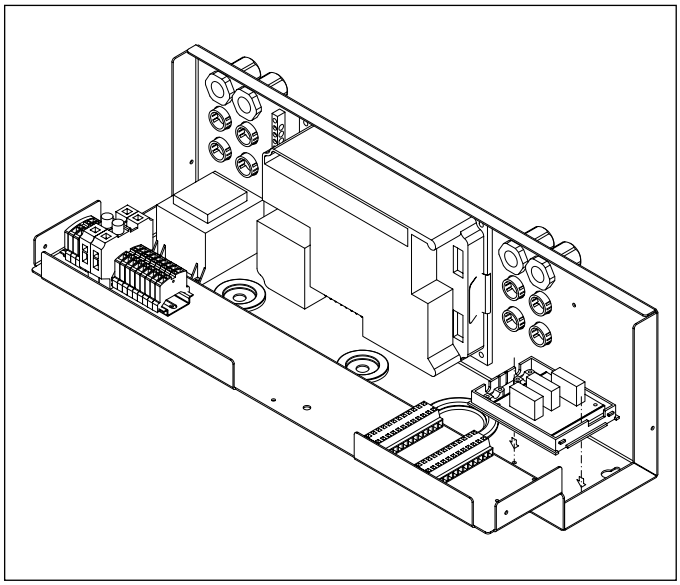

Fig. 21 Indicating module No.1
00.21H.79.00009

9.7 Options/accessories

9.7.1 Provision for thermostat pocket

The flow pipe is tapped and standard plugged (½" BSP 'f'). This can be used to insert an optional thermostat pocket (length 35 mm, ½" BSP 'm') for use with external sequence control.

9.7.2 Water pressure sensor

The water pressure sensor shuts the boiler down if the system pressure drops below sensor setpoint (basic setting 0.8 bar). During this shut-off the pump will stop running (if connected to the boilers control unit).The sensor is provided complete with wiring and connecting plug, which is connected to a mating plug in boiler wiring. See fitting instructions provided with the sensor.
By pressing the ▹▹▹- and ←┘-keys simultaneously during 2 seconds the presence of the sensor is being detected and will monitor system pressure in accordance with setpoint.

⚠ ***Important!!*** The sensor is only suitable for system pressures up to 4 bar.

9.7.3 Differential pressure sensor

This differential pressure sensor is fitted to the boiler monitoring the differential pressure between the burner inlet and heat exchanger outlet. Should the differential pressure exceed XX mbar the LED on the instrument panel above the ←┘-key will flash red on and off. The boiler will continue to function normally, but service visit must be arranged. The sensor is provided complete with sensing tubes, wiring and connecting plug, which is connected to a mating plug in boiler wiring. See fitting instructions provided with the sensor.
By pressing the ▹▹▹- and ←┘-keys simultaneously during 2 seconds the presence of the sensor is being detected and will monitor differential pressure.

9.7.4 Gas valve proving (only for 120, 160 and 200 kW boilers)

The boiler gas valve multiblock has two safety shut-off valves. A valve proving system can be installed on the gas valve multiblock monitoring the gas pressure between the two valves during the pre-purge time of the boiler (once fitted the pre-purge time is extended to allow VPS-system to function). Should the sensor detect a pressure loss during this period, the boiler will go to a lockout condition displaying fault code 89.
Connecting the gas valve proving is described in the fitting instruction, which is supplied with it. The presence of the gas valve proving can be adjusted by means of digit 1 in the setting mode on service level (see *par. 7.6.13.)*

9.7.5 Minimum gas pressure switch

A minimum gas pressure switch can be connected to terminals 13 and 14 of the 24 V-terminal strip (X29) . Note that the wire bridge must first be removed. The gas pressure switch will shut the boiler down (with shut-off code b 2.6.) or prevent it operating if the gas pressure drops below 17 mbars. The boiler doesn't lockout, but waits until pressure is re-established above minimum level.

9.7.6 Indicating module No.2

With this optional module (AM3-10 print) it is possible to report the boiler operating mode 'boiler on' and 'boiler high fire'.
The internal Volt free contact across terminals 25 and 26 (n/o) of the supplied terminal strip will change to n/c when the boiler starts.
The internal Volt free contact across terminals 27 and 28 (n/o) of the supplied terminal strip will change to n/c when the boiler goes to high fire (confirmation of high fire will depend on parameter 5. setting).

Maximum power supply : 230 Volt;
Maximum current per contact : 1 A.

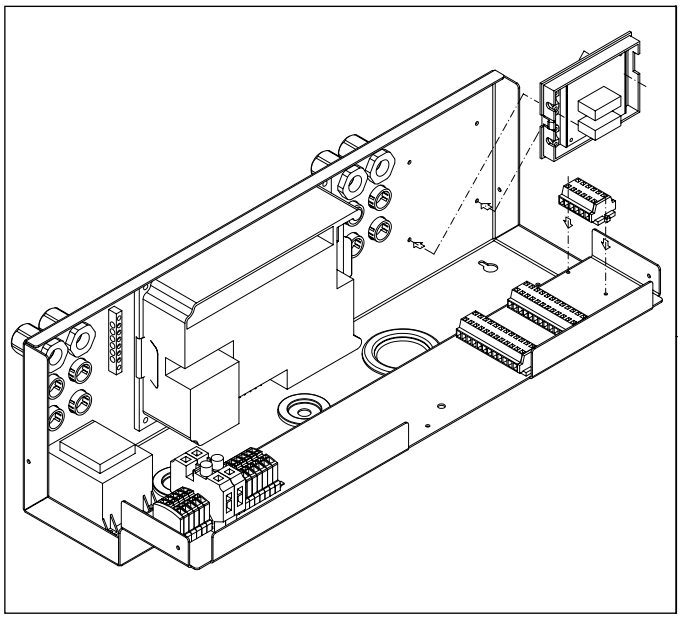

Fig. 22 Indicating module No.2
00.21H.79.00010

9.8 Remaining connections

9.8.1 System pump

It is possible to connect a system pump to terminals 10 and 11 of the 230 V-terminal strip (X27) with the following specifications:

Maximum power supply : 230 Volt
Maximum current : 1 A.
If system pump exceeds these values the terminals can only be used to switch a pump relay.

⚠ Cannot be used with multi boiler installations

⚠ The connections are polarity sensitive; terminal 11 of the 230 V-terminal strip (X27) is live.

9.8.2 Frost protection

Install the boiler in a frost-free room. If the boiler water temperature drops below 7°C, the built-in frost protection system is activated as follows:
- below 7°C - system pump is switched on if connected to boiler
- below 3°C - boiler is switched on.

When the flow temperature reaches 10°C the boiler and pump switch off (note: pump signal has fixed run on time of 15 minutes).

⚠ **This control is designed to protect the boiler**
- for full system protection use a frost thermostat across terminals 7 and 8 of the 24 V-terminal strip (X29) (not applicable when using a analog boiler control) or use a weather compensator.

10 COMMISSIONING

10.1 Initial lighting

1. ⚠ Isolate main power supply.
2. Remove the front casing.
3. Check gas supply is available, sound and vented.
4. Open instrument panel.
5. Check the electrical connections match the control options.
6. Check boiler and installation is full of water and if pressurised at the correct pressure.
7. Vent the system.
8. Fill the siphon with water.
9. Close instrument panel.
10. Check the flue gas and air inlet ducting or combustion air supply.
11. Open the gas cock.
12. Re-establish power supply to boiler and controls.
13. Set the boiler control to heat demand or use manual override.
14. Switch the boiler on 1.
15. The boiler should start with the run sequence indicated in the code-display:
    - 0 = IMS-system moving to maximum.
    - 5 = Waiting mode; the fan runs and the boiler waits until sufficient air transport is established (air pressure switch open or closed).
    - 1 = Pre-purging.
    - 2 = Ignition of the gas/air mixture.
    - 3 = The burner is firing.

16a. Check and correct, if necessary, the boiler for correct gas/air setup. Checking takes place on full and part load, adjustment takes place only on full load. For checking and adjusting are required: an electronical CO_2-gauge (on the basis of O_2) (measuring point 3, see Fig. 02) and a gas pressure gauge.
Note that the opening around the measuring probe is sealed properly during measurement.Note also that measuring the O_2 levels in the flue gas is necessary, because direct measurement of CO_2 can lead to inaccuracies due to varying CO_2 levels in the natural gas.

16b. Connect gas pressure gauge to the gas valve multiblock.

16c. Connect flue gas analyser, ensuring the connections are gas tight.

16d. Operate boiler at full load (forced mode 'high') by pressing the ⇕- and [+]-key simultaneously for 2 seconds. The letter H will now appear on the display.

16e. When full load is reached, check gas pressure (with removed front casing) against *Table 22*. The pressure has to be 0 mbar. Adjust if necessary using the adjustment screw on the gas valve multiblock.
Re-adjustment takes place with the zero point adjustment of the gas valve multiblock (see *Fig. 23*).

	front casing removed			front casing placed		
CO_2% in …	**CO_2%**	**O_2%**	**gas pressure gas valve**	**CO_2%**	**O_2%**	**gas pressure gas valve**
Full load (100%)	8.7 ± 0.2%	5.4 ± 0.4%	0 mbar	9.0 ± 0.2%	4.8 ± 0.4%	not measurable
Part load (±10%)	8.7 ± 0.5%	5.4 ± 0.9%	not relevant	9.0 ± 0.5%	4.8 ± 0.9%	not measurable

Table 22 Adjustment values CO_2 and O_2

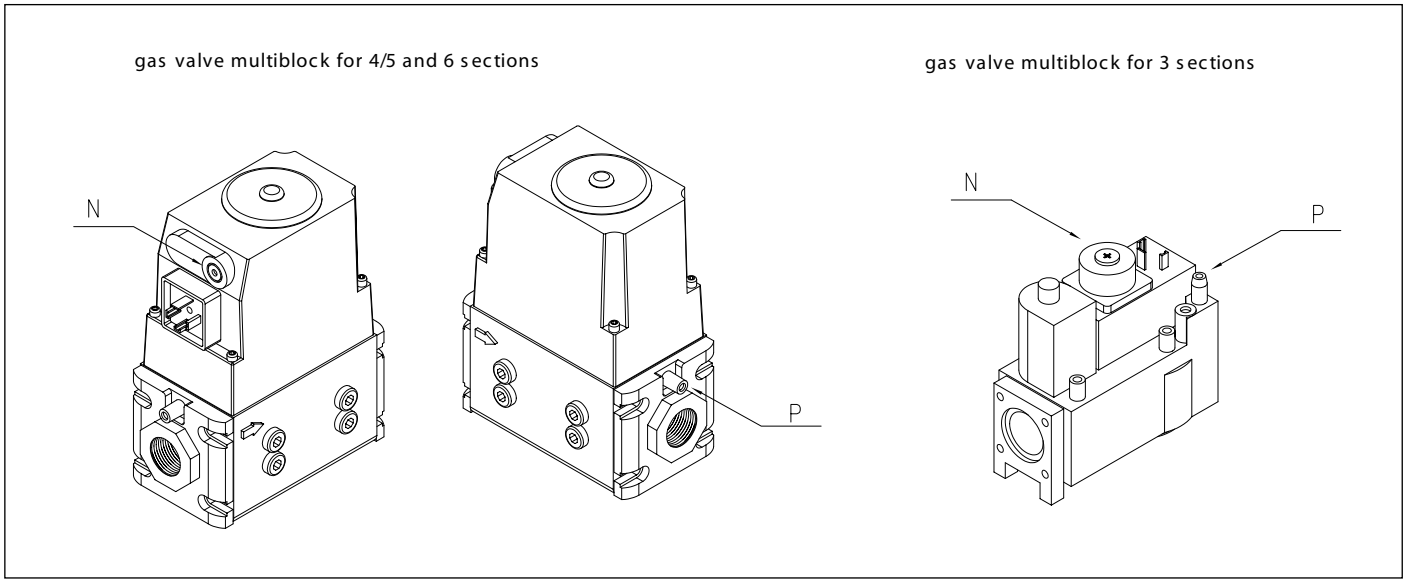

Fig. 23 Zero point adjustment gas valve multiblock
00.21H.79.00004

16f. Check CO_2-percentage (O_2-percentage) against the table. Adjust if necessary using the adjustment screw on the IMS-system (see *Fig. 24*). Is the CO_2-percentage too high (O_2-percentage too low), turn the adjustment screw to the right, simultaneously holding the nut with a ringwrench. Is the CO_2-percentage too low (O_2-percentage too high), turn the screw to the left.
Check the flame via the inspection window. The flame should be stable, mainly blue with burner surface covered by orange dots.

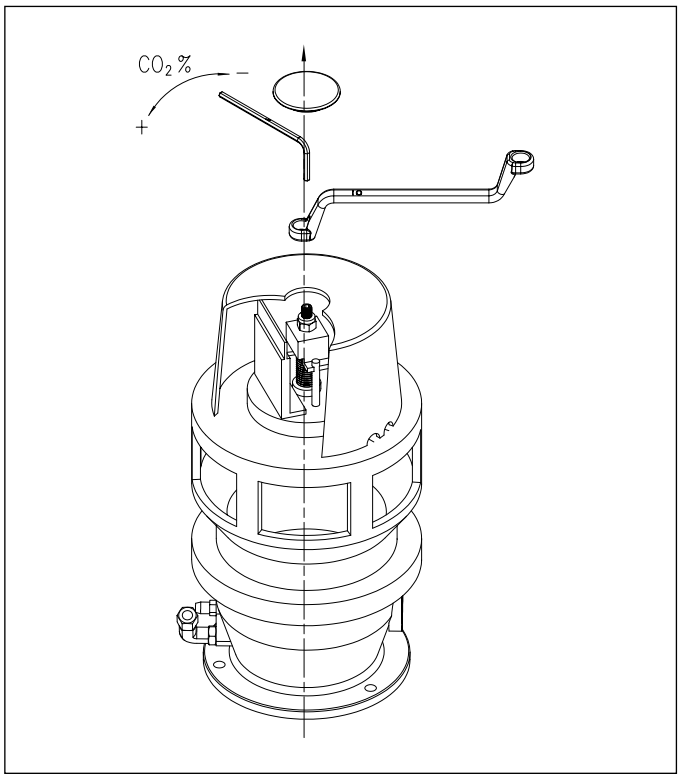

Fig. 24 Adjustment point CO_2% / O_2% IMS-system
00.21H.79.00018

16g. Run the boiler at part-load by pressing the ⇕- and [-]-key simultaneously for 2 seconds. The letter [L] will now appear on the display.
16h. When part load is reached, check CO_2-percentage (O_2-percentage) against Table 22. Should the value lie outside the boundaries as mentioned in the table, please contact our Service Department.
16i. Remove the flue gas analyser. Seal the test point.
17. Fit the boiler front panel.
18. Allow boiler to run up to its set flow temperature and shut off.
19. When pumps have stopped, vent the system and check the water pressure.
20. The boiler is now ready for use.
21. Set system controls to the required values.
22. Send the commissioning reports to Broag.

⚠ The Remeha Gas 210 ECO is supplied with a number of factory default settings that should be correct for most installations. If other setting values are required: see *par. 7.5 and 7.6.*

The following operating situations are now possible:
23a. **Modulating operation:** The output of the boiler modulates on the basis of the flow temperature, asked by the modulating control (see also note under point 23c and par. 9.4).
23b. **High/low operation:** The boiler is operating at part load or full load, depending on the heat demand (see *par. 9.4*). The boiler is going to modulate on the safety boundaries.
23c. **On/off operation:** The boiler modulates between minimal and maximal output on the basis of the flow temperature pre-set on the boiler (see also *par. 9.4*).

Note: The boiler will first burn at forced part load. The factory setting for forced part load time is 2 minutes. This setting is correct if use is made of modulating controls (see *point 22a*). For on/off operation a forced part load time of 3 minutes is recommended (setting mode, parameter 8., see *par. 7.6.4*).

23d. **0-10 Volt operation:** Depending on the adjustments (see *par. 9.4*), two situations are possible:

- The given off output varies linear with the sent signal, 1V = 10%, 10V = 100%.
- The given off flow temperature varies linear with the sent signal, 1V = 10°C, 10V = 100°C.
  The boiler modulates on the basis of the adjusted flow temperature (setting range 20°C up to 90°C) and on a maximal ΔT protection.

10.2 Shutdown

1. Switch off the on/off switch of the boiler. With this, a possible boiler control will be without tension also.
2. Close the gas cock.

Note:
When the boiler is out of operation, it is not protected against frost!

11 FAULT-FINDING

11.1 General

First of all check if it's a failure message by verifying the following points:
- Check if the power supply is switched on.
- Check if heat demand is present and the boiler control is adjusted properly.

If the above-mentioned points are OK and still the boiler isn't running, then it concerns a failure message.
In case of a failure, both digits in **code**-display as digits in -display will flash. Correct the cause of the failure and restart the boiler by pressing the **reset**-button.

Important: Before resetting, accurately record the fault code (3 digits, blinking and dots included) and always pass on this information if you request assistance. The fault code is important for correctly and rapidly tracing the nature of the fault. For an explanation of the various failure codes and their possible causes, see *Table 23.*

For a read out of the most recent faults, see *par. 7.8.*

Besides failure codes (lockouts) also shut-off codes exist (see *par. 7.4).* During this condition the code-display will show a b, whilst the -display indicates the cause with two flashing dots. A shut-off code may indicate a system problem or an incorrect parameter setting and does not represent a boiler failure.

11.2 Overview malfunctions (locking)

On failure codes as mentioned below, pay attention to possible dots between the digits (0.0 = 100, 0.1 = 101 and 0.2 = 102, see also *par. 7.1.5*).

Failure code	Description	Cause / control points
00	Flame simulation	- Burner still glows after a too high CO_2-percentage. - Check combined ignition/ionisation probe (distance between pins 3 - 4 mm). - Gas valve multiblock leaks or stays in opened position.
01	Short-circuit in 24V circuit	Check: - wiring to the sensors - wiring to the gas valve multiblock.
02	No flame or no ionisation (after 5 start attempts)	a. No ignition spark. Check: - connection of ignition cable and spark plug cap - ignition cable and electrode for breakdown - on breakdown between spark plug cap and earth wire/mass - electrode distance: must be 3-4 mm - condition of the burner deck (short-circuit burner deck/electrode) - earth connection/mass. b. Ignition sparks, but no flame. Check if: - gas cock is open - inlet gas pressure is sufficient (20 - 30 mbar) - gas pipe is vented properly - gas valve is energized during ignition and if it opens too - electrode is clean and fitted properly - the gas pipe is not clogged or shows an assembly fault - the air supply or flue gas outlet is not clogged or shows an assembly fault - the gas/air ratio is adjusted properly. c. Flame, but ionisation signals not sufficient (< 3 µA). Check: - condition of electrode and earth wire/mass - the temperature sensors on leak current.
03	Gas valve defective	The control 'sees' no gas valve multiblock. Check if: - the wiring on the gas valve multiblock is connected properly - the gas valve multiblock is defective (burned / short-circuit).

04	Control fault	Voltage interruption during lockout condition.
05	External influences	Remove possible external EMC-influences (0-10v control cables and sensor cables may require screening).
08	Air pressure differential switch does not close.	Check: - the air supply or flue gas outlet is not clogged or shows an assembly fault - the air pressure differential switch and the connections.
11	Disturbance internal communication bus	- Check flat cable in the instrument panel for short-circuit - Liquid formation on display - Remove possible external EMC-influences.
12	External interlock	- External interlock, connected to terminals 1 and 2 of the 24 Volt-terminal strip (X29), became effective or wire bridge is removed - Fuse F2 from the automat is defective.
18	Flow temperature too high	Check: - water flow - whether the installation is vented properly - the temperature sensors on deviations - the water pressure in the system.
19	Return temperature too high	
28	Fan does not run	- Fuse F4 defective - Fan or rotor defective or improperly fitted - Fan cable or connector is corroded. Result: power supply or PWM-signal is absent.
29	Fan keeps running or signal not correct	- Check connectors of fan cable on both fan as automat side - Fan defective - Extreme draft through flue gas discharge duct.
30	Max. ΔT exceeded	Check water flow.
31	Temperature sensor fault	Short-circuit in flow temperature sensor.
32	Temperature sensor fault	Short-circuit in return temperature sensor.
35	Temperature sensor fault	Short-circuit in flue gas temperature sensor.
36	Temperature sensor fault	Flow temperature sensor defective or not connected.
37	Temperature sensor fault	Return temperature sensor defective or not connected.
40	Temperature sensor fault	Flue gas temperature sensor defective or not connected.
52	Maximum flue gas temperature exceeded	Check heat excanger on fouling on flue gas side.
61	Air transport	Air pressure differential switch does not open. Check if: - air pressure differential switch is defective - there is short-circuit in wiring - there is extreme draft through flue gas discharge duct.
77	Ionisation signal lost during operation (after 4 restarts within one heat demand cycle)	- Flue gas recirculation. Check flue gas discharge duct on possible assembly faults and the heat exchanger on possible leaks - Insufficient air transport due to clogging - Check adjustments of the boiler.
83	Heat exchanger temperature too high	Check if: - circulation pump runs - water flow through the boiler is sufficient - water pressure > 0,8 bar.
86	Close (0%) and end position (100%) IMS detected simultaneously	Check: - adjustment of the 0% and 100% pennant of the IMS (both in light sluice?) - wiring and connectors. If OK, replace print on the IMS.

87	Close (0%) position IMS not detected	Check: - light cell on fouling - adjustment of the 0% pennant of the IMS - wiring and connectors. If OK, replace print on the IMS.
89	Gas leak detected	The gas valve proving system (VPS) has detected a gas leak. Check for external leaks. If OK, replace gas valve multiblock.
93	Close (0%) position and minimum position IMS detected simultaneously	Check: - adjustment of the 0% and minimum pennant of the IMS (both in light sluice?) - wiring and connectors. If OK, replace print on the IMS.
95	Temperature sensor fault	Short-circuit in heat exchanger temperature sensor.
96	Temperature sensor fault	Heat exchanger temperature sensor defective or not connected.
0.0	Minimum position IMS lies above start position IMS	Check: - adjustment of the minimum pennant of the IMS - wiring and connectors. If OK, replace print on the IMS.
0.1	Minimum position IMS not detected	Check: - light cell on fouling - adjustment of the minimum pennant of the IMS - wiring and connectors. If OK, replace print on the IMS.
0.2	End position (100%) IMS not detected	Check: - light cell on fouling - adjustment of the 100% pennant of the IMS - wiring and connectors. If OK, replace print on the IMS.
Other codes	Automat failure	With not mentioned codes in this table, proceed as follows: - press once at **reset**-key - check wiring on possible short-circuit - when the same failure code keeps occurring, please contact our Service Department.

Table 23 Fault codes

12 INSPECTION AND MAINTENANCE INSTRUCTIONS

12.1 General

The Remeha Gas 210 ECO design requires minimal maintenance, however, the highest efficiency levels can only be guaranteed by ensuring annual inspection and maintenance. Annual inspection includes:

- **combustion control**
  Combustion air is aspired by the fan through the Integrated Mixing System (IMS). Depending on combustion air
  pollution levels, it cannot be excluded that varying quantities of deposits will attach to the IMS. The dirt deposits may influence the air/gas ratio (and therefore the CO_2 percentage in the flue gases), especially under low flame conditions, causing a reduction of combustion air intake. As a result, the gas/air mixture will become richer and the CO_2 contents in the flue gases will increase.
  For this reason, **<u>any deviation in CO_2 percentages</u>** necessitates IMS cleaning operations **<u>before</u>** any changes in IMS settings are operated. Simultaneously, the fan, the burner and the heat exchanger will have to be cleaned.
- **lubrication of the IMS air/gas mixing device**
- **siphon cleaning**
- **ignition probe control**
- **leakage control (water, flue gases, gas)**
- **hydraulic pressure control**

12.2 Combustion control

Combustion control includes O_2/CO_2 measurement inside the flue gas discharge pipe (see *Fig. 02, position 3*) and the gas pressure on the gas valve multiblock (see *Fig. 02, position 11 and par 10.1*) The boiler has to be heated up to approx. 70 ℃ water temperature. Measured values must comply with values specified in *Table 22*. The flue gas temperature may also be measured at the flue gas pipe measuring point. If the measured temperature exceeds the return water temperature by more than 30 ℃, this may indicate the presence of dirt deposits on the heat exchanger.
In case these controls show that boiler combustion quality or heat transfer is not satisfactory, corrective maintenance will be necessary in accordance with instructions in paragraph *12.2.1 to 12.2.5.*
In case the O_2/CO_2 level as well as the flue gas temperature are situated within the required scope, proceedings will now have to include the lubrication of the IMS mixing device (*par. 12.3*)

12.2.1 Corrective maintenance

Corrective maintenance includes cleaning the IMS, the fan, the heat exchanger and the burner, in this order.

12.2.2 Cleaning the IMS

Cleaning the IMS needs the following steps:

1. Withdraw the front casing.
2. Fire boiler at maximum output (forced mode: 'high') by pressing the ⇕- and the [+] touches simultaneously during 2 seconds. The symbol '✋' will blink on the display for confirmation.
3. When the IMS has been fully opened (top position) and preventilation starts, the boiler has to be shut off by switching the boiler electric power supply off (use main switch on control panel).
4. Shut off gas valve in the boiler gas supply pipe.
5. Remove electrical connections of the IMS (two plugs).
6. Loosen M5-socket head bolts on top of the IMS and remove black protection cover.
7. Lift metal cover with the attached axle and dishes vertically from the IMS housing.
8. ⚠ **Attention: avoid any damage to the axle and its dishes!**
9. Do **<u>not</u>** take apart the air dish and the dented dish (preset assembly must be maintained).
10. Clean brass gas dish, the air dish and the housing interior by means of a fluff-free cloth, drenched in spirit.
11. Reassemble the axle with its dishes into the housing. The axle must be positioned **into** its guide and be careful to avoid any direct contact between the dishes and the housing.
12. Lubricate the IMS in accordance with *par. 12.3, point 6 until 10.*
13. Reassemble both covers and reconnect electric wiring.

12.2.3 Fan cleaning

1. Remove electric wiring from fan.
2. Loosen union nut between the IMS and gas valve multiblock (do not forget the sealing).
3. Loosen nuts and bolts at the fan blowing end.
4. Remove fan including the IMS completely.
5. Remove bolts from the fan intake end.
6. Separate the IMS from the fan.
7. Clean fan with synthetic hard brush. **Attention: be careful not to move the balancing clips on the fan blades!**
8. Remove loose dust from the fan.
9. Reassemble the IMS to the fan.
10. Reassemble the IMS together with the fan to the boiler. Be careful to correctly reposition the sealing between the fan and the mixing bend.
11. Reconnect the electric wiring.

12.2.4 Heat exchanger cleaning (exterior)

⚠ **Attention:** The sealing between the inspection cover and the heat exchanger may stick; this may also happen to the sealing between the burner and the heat exchanger. Be careful to avoid any cracks in the sealing. A damaged or hardened sealing must always be replaced by a new one.

1. Loosen the inspection cover nuts at the front of the heat exchanger.
2. Remove the inspection cover from the heat exchanger.
3. Clean the heat exchanger with a dedicated cleaning tool (option) or with compressed air. It is to be noted that in the absence of above options, it is also possible to rinse the heat exchanger with water.
4. Clean condensate collector by taking out the plug and rinsing the collector with water.

12.2.5 Burner cleaning

1. Remove the burner.
2. Check burner visually and, if necessary, clean with compressed air (pressure between 2 and 5 bar, distance to burner surface: 1 cm).
3. Reassemble the burner.

⚠ **Be careful to avoid any contact between wiring and hot boiler parts!**

Open the gas valve in the boiler gas supply pipe, fire the boiler and proceed with a full combustion control (flue gas analysis, see *par. 10.1*). The boiler may now be, if necessary, commissioned in accordance with *par. 10.1, position 16.*

Shut off the boiler using the main switch and proceed with *par. 12.4,* siphon cleaning.

12.3 Lubrication Integrated Mixing System (IMS)

1. Remove front casing.
2. Fire boiler at maximum output (forced mode ‘high’) by pressing simultaneously the m- and the [+] touches during 2 seconds. The symbol ‘h’ will blink on the display for confirmation.
3. When the IMS has been fully opened (top position) and pre-ventilation starts, the boiler has to be shut off by switching the boiler electric power supply off (use main switch on control panel).
4. Loosen M5-socket head bolts on top of the IMS and remove black protection cover.
5. Clean wire shaft (1) underneath the locking nut (*Fig. 25*); remove used grease at the bottom of the wire shaft around the movement nut (2) with a clean cloth.
6. Apply a small quantity (1/2 bag) of “Urethyn EM/2-grease (option) with a spatula, avoiding any contact between the grease and the printed circuit.
7. Switch on electrical power supply to the boiler, causing the IMS to close whilst the grease will be distributed along the shaft.
8. Shut off power supply to the boiler and remove all excess grease around the movement nut (2).
9. In case the wire shaft has not been greased completely (the grease must give the entire shaft a ‘shiny’ impression), *points 6, 7 and 8* will have to be repeated.
10. Reassemble both covers using the socket head bolts.

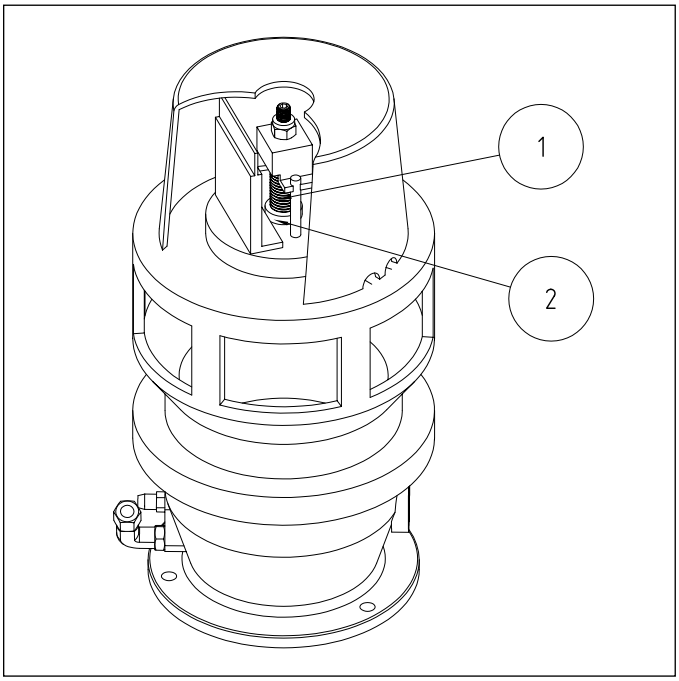

Fig. 25 Lubrication of the IMS
00.21H.79.00045

12.4 Siphon cleaning

Remove siphon from the boiler and proceed with cleaning. Fill up siphon with fresh water and reassemble siphon.

12.5 Ignition probe control

Check ignition probe position (between 3 and 4 mm.) and replace probe, if necessary, including sealing. Check any presence of hair cracks in the china of the probe (which may cause spark transmission).

12.6 Leakage control

Ensure leakage control of all hydraulic, gas and flue gas circuits.

12.7 Hydraulic pressure control

Hydraulic pressure must have a minimum pressure of 0,8 bar. Hydraulic pressure depends on the height of the heating installation above the boiler (static pressure, 1 bar = 10 m. height). It is advisable to fill the installation up to 0,8 above the static pressure.

Remeha Gas 210 ECO

ISO 9001
since 1988

CE

Broag Ltd.
Remeha House
Molly Millars Lane
RG41 2QP WOKINGHAM, Berks.
Tel: +44 118 9783434
Fax: +44 118 9786977
Internet: uk.remeha.com
E-mail: boilers@broag-remeha.com

remeha

62137-0305

Subject to alterations